US 20070217932A1

(19) United States

(12) Patent Application Publication

(10) Pub. No.: US 2007/0217932 A1

(43) Pub. Date: Sep. 20, 2007

Voyeux et al.

(54) METHOD AND SYSTEM FOR PROVIDING ADJUSTABLE COMPRESSION FORCE ON A TUBE IN A PERISTALTIC PUMP

(76) Inventors: **Claude Voyeux**, Goussainville (FR); **Mustapha Mazouzi**, Velizy (FR)

Correspondence Address:
**FOLEY & LARDNER LLP**
**150 EAST GILMAN STREET**
**P.O. BOX 1497**
**MADISON, WI 53701-1497 (US)**

(21) Appl. No.: **11/612,011**

(22) Filed: **Dec. 18, 2006**

**Related U.S. Application Data**

(63) Continuation of application No. PCT/FR05/01524, filed on Jun. 17, 2005.

(30) **Foreign Application Priority Data**

Jun. 22, 2004 (FR) ..... 0406764

**Publication Classification**

(51) **Int. Cl.**
*F04B 43/12* (2006.01)

(52) **U.S. Cl.** ..... **417/477.2**; 417/477.11

(57) **ABSTRACT**

A cassette for use in a peristaltic pump is provided. The cassette includes a cassette frame, a cam, a cam position selector switch, and a biasing member. The cassette frame mounts to the peristaltic pump. The biasing member mounts to the cam and to the cassette frame and operably couples with the cam position selector switch. Moving the cam position selector switch in a first direction releases the cam position selector switch from the cassette frame. Moving the cam position selector switch in a second direction after releasing the cam position selector switch from the cassette frame adjusts a position of the cam relative to the cassette frame. The second direction is approximately perpendicular to the first direction.

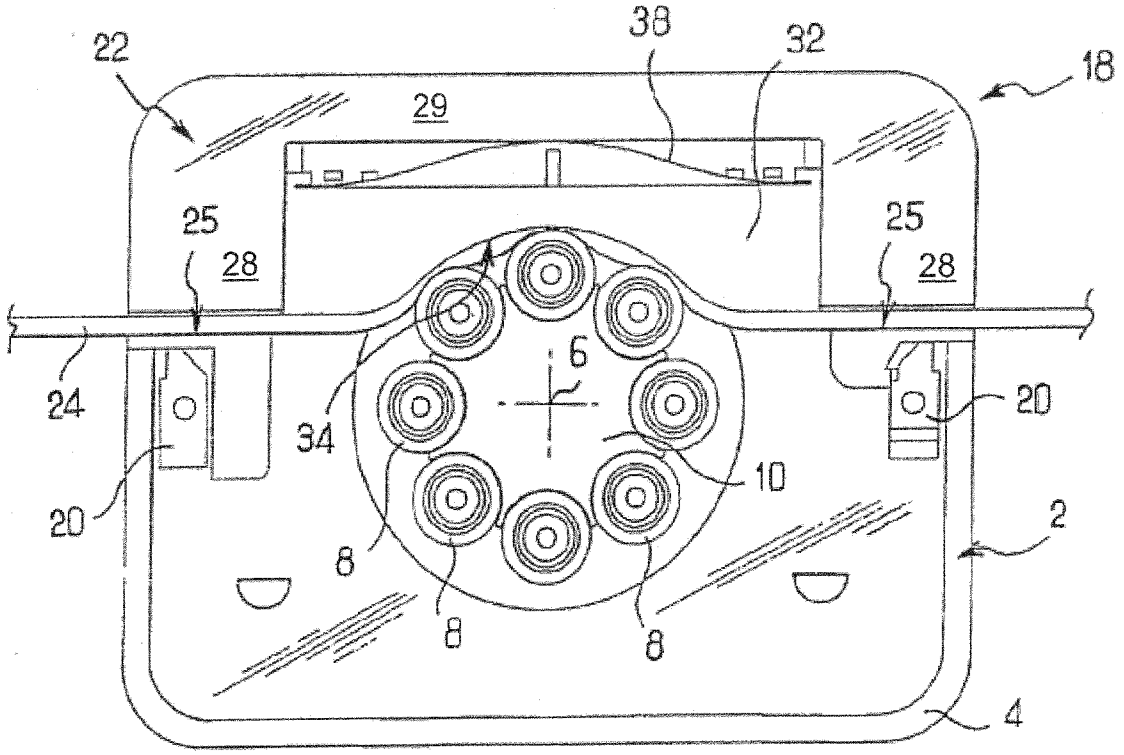

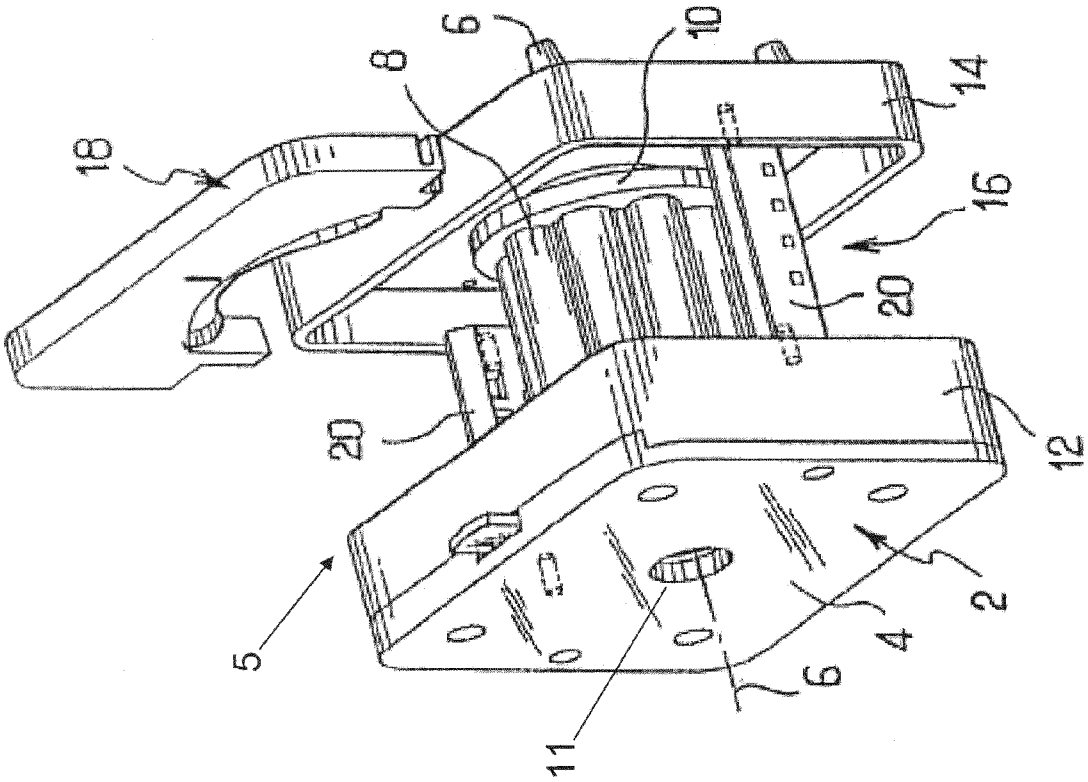


FIG. 1

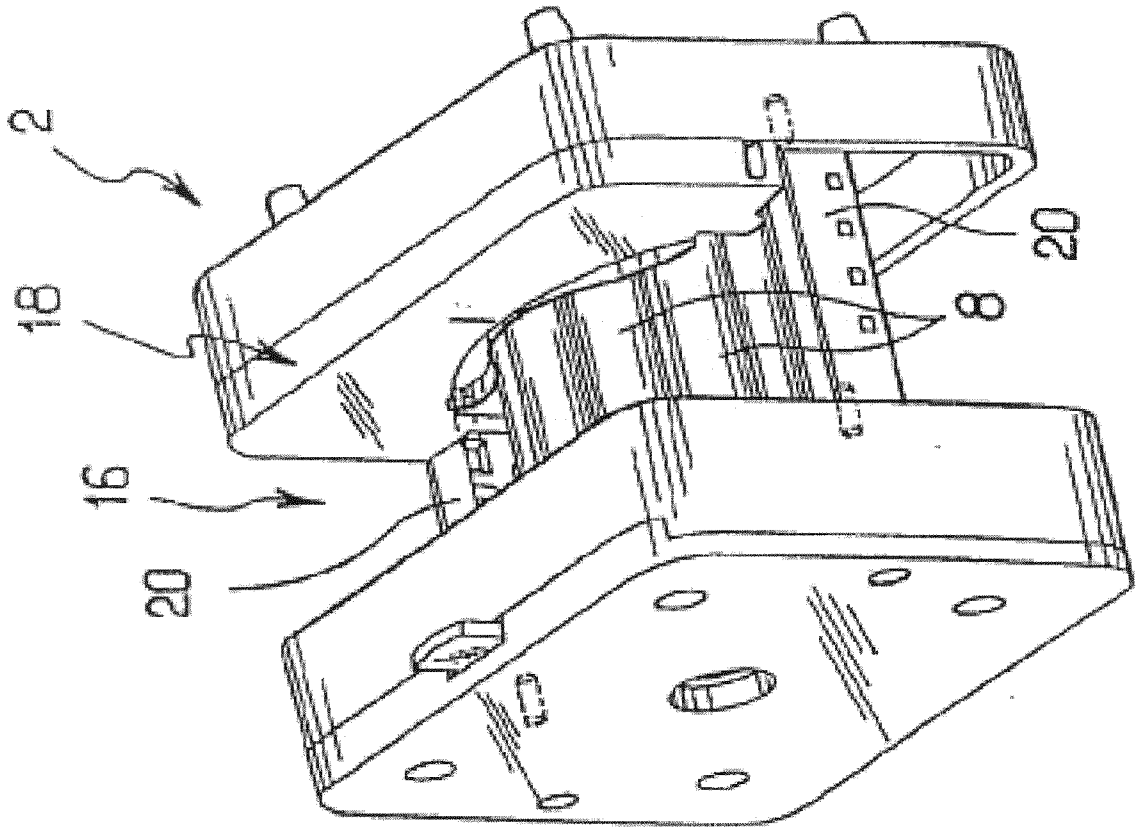


FIG. 2

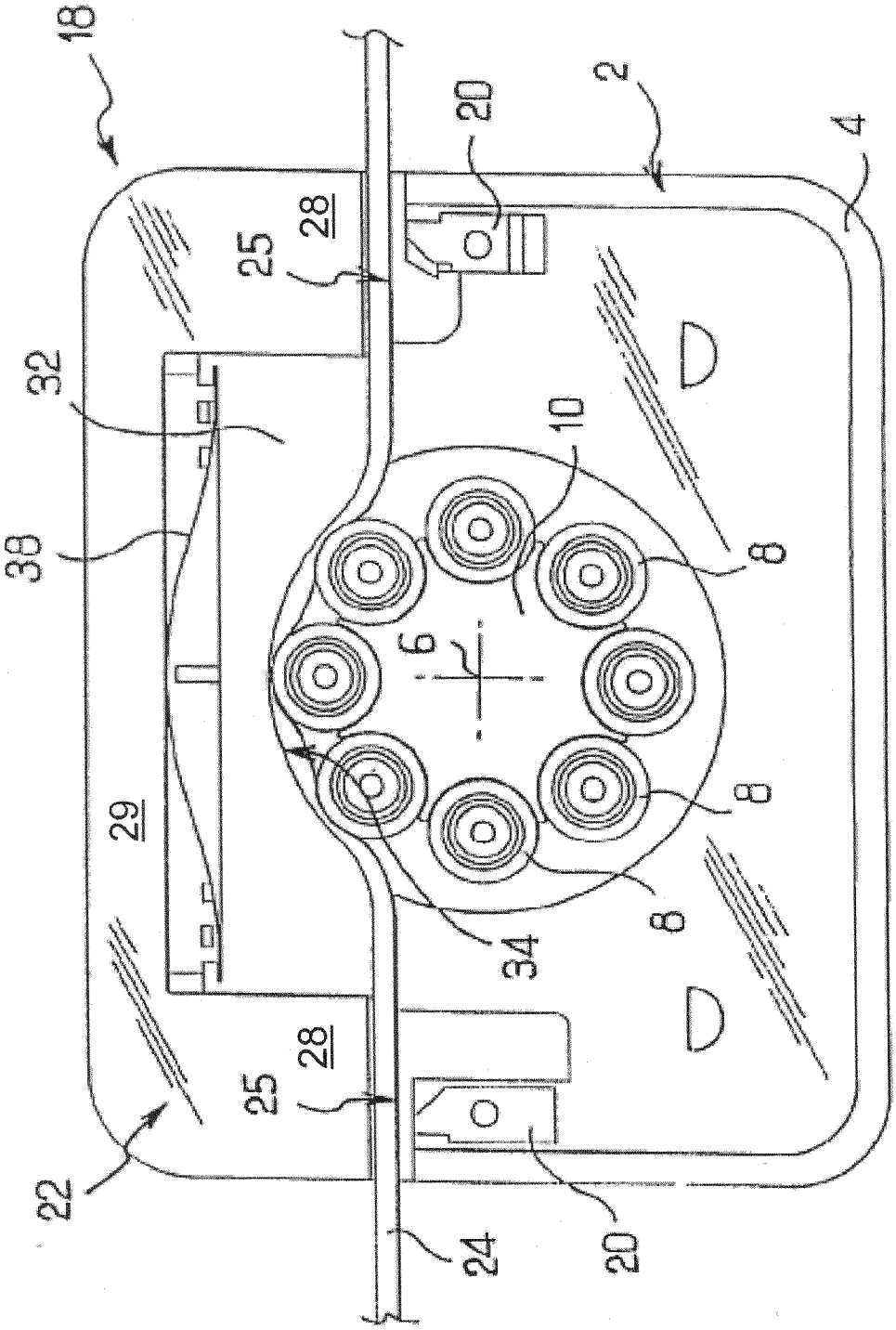


FIG. 3

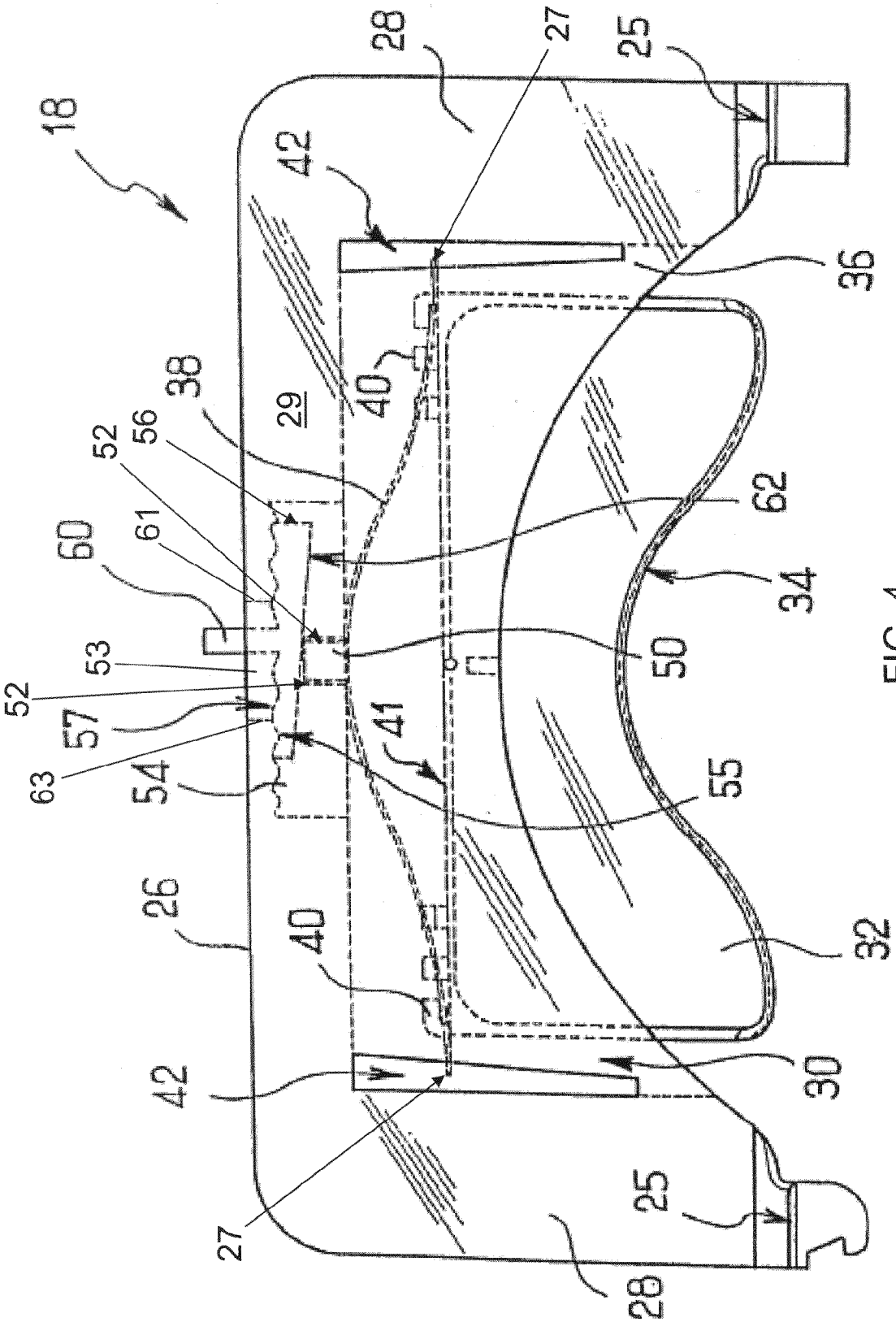
18
28
27
25
42
36
38
29
40
52
56
62
60
61
34
53
50
52
57
41
63
54
55
26
40
32
42
30
27
25
28

FIG. 4

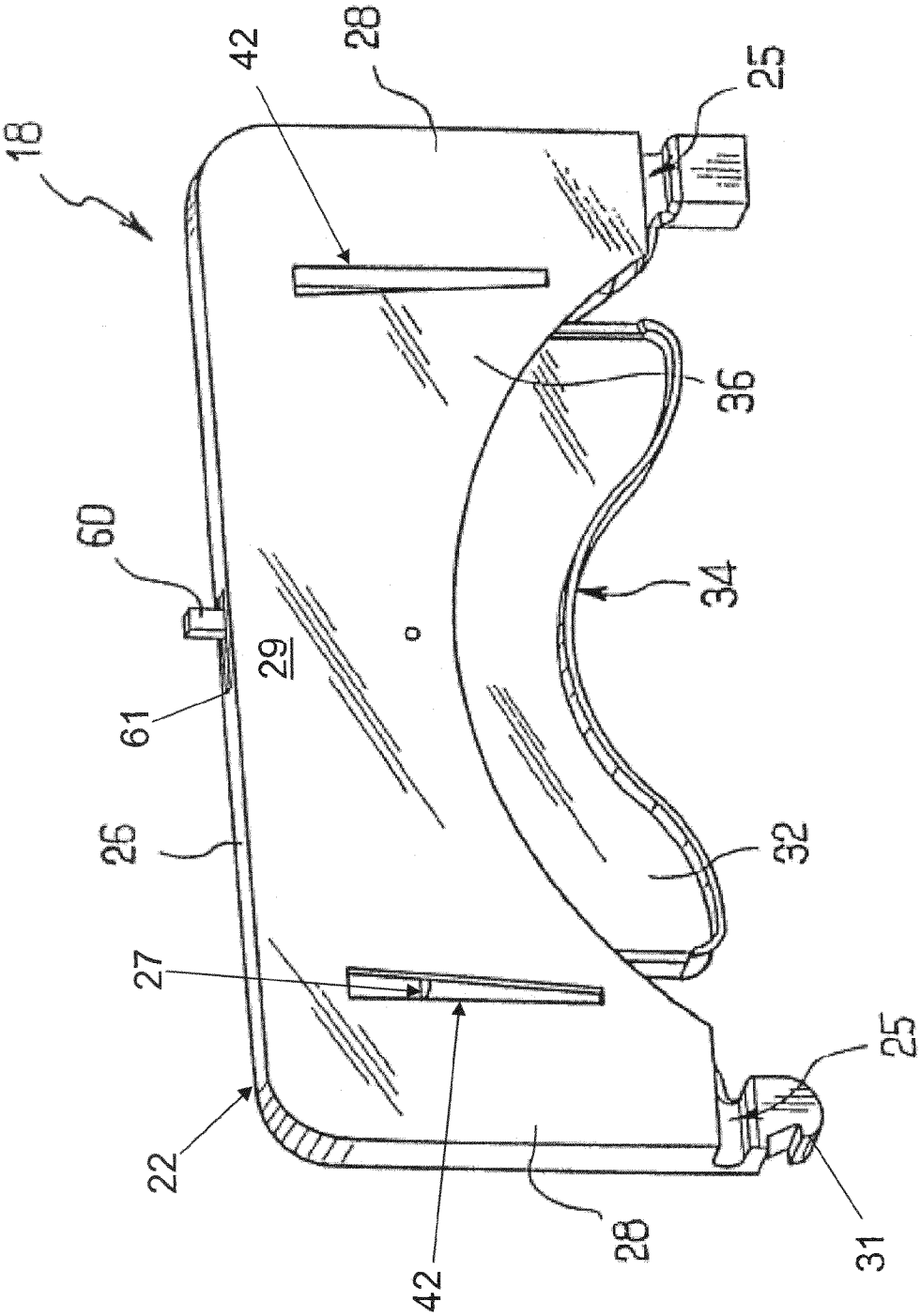


FIG. 5

# METHOD AND SYSTEM FOR PROVIDING ADJUSTABLE COMPRESSION FORCE ON A TUBE IN A PERISTALTIC PUMP

## CROSS-REFERENCE TO RELATED APPLICATIONS

[0001] This application is a continuation application of International Application No. PCT/FR2005/001524 filed on Jun. 17, 2005, the entire contents of which is hereby incorporated by reference; which claims the benefit of French Patent Application No. 04/06764 that was filed Jun. 22, 2004, the entire contents of which is hereby incorporated by reference.

## FIELD

[0002] The field of the disclosure relates generally to peristaltic pumps. More specifically, the disclosure relates to cassettes that provide an adjustable compression force on a tube used in a peristaltic pump.

## BACKGROUND

[0003] Peristaltic pumps have been known for many years, and are commonly used for medical and research purposes. Peristaltic pumps move a liquid through a tube without any part of the pump ever touching the liquid. As a result, it is possible to pump liquids, such as blood, which are sensitive to external contamination. Typically, a pump comprises rotating rollers that compress a part of the flexible tube as they move, which propels the liquid through the tube.

[0004] For example, such a pump is described in document EP 339 857. The flexible tube must withstand the compressive force while remaining absolutely leak proof. The pump in the aforesaid document includes removable cassettes that each include a tube and a sliding movable cam that pushes the tube against the rollers to ensure good contact between tube and rollers. To maintain the tube's lifetime, the pump includes means to modulate the compressive force exerted by the cam on the tube. These means include two wedges which move inside the cassette in order to adjust the position of the cam relative to the tube. Each wedge is connected with the threaded part of a rod whose rotation can be externally controlled with a knob. However, this configuration requires a relatively long time to adjust the cam position when it is necessary to change the compressive force over a large range. Thus, what is needed is a method and a system for providing a rapid adjustment of the cam position relative to a tube in a peristaltic pump.

## SUMMARY

[0005] A method and a system for adjusting a position of a cam in a peristaltic pump is provided in an exemplary embodiment. The position of the cam is easily and quickly moved even over a large range. By adjusting the position of the cam, the compression force on the tube placed in the peristaltic pump is modified to accommodate different size tubes and different types of fluid flowing through the tube by the action of the pump.

[0006] In an exemplary embodiment, a cassette for use in a peristaltic pump is provided. The cassette includes, but is not limited to, a cassette frame a cam, a cam position selector switch, and a biasing member. The cassette frame mounts to the peristaltic pump. The biasing member mounts to the cam and to the cassette frame and operably couples with the cam position selector switch so that movement of the cam position selector switch adjusts a position of the cam relative to the cassette frame.

[0007] In an exemplary embodiment, a peristaltic pump is provided. The peristaltic pump includes, but is not limited to, a pump frame, a plurality of rollers configured to mount to the pump frame, an actuator operably coupled to move the plurality of rollers, and a cassette. The cassette includes, but is not limited to, a cassette frame, a cam, a cam position selector switch, and a biasing member. The cassette frame mounts to the pump frame and receives a tube. The cam is positioned to compress the received tube against the plurality of rollers. The biasing member mounts to the cam and to the cassette frame and operably couples with the cam position selector switch so that movement of the cam position selector switch adjusts a position of the cam relative to the cassette frame.

[0008] In another exemplary embodiment, a method of adjusting a position of a cam in a peristaltic pump is provided. A cassette is mounted to the peristaltic pump. The cassette includes, but is not limited to, a cassette frame, a cam, a cam position selector switch, and a biasing member. The biasing member mounts to the cam and to the cassette frame and operably couples with the cam position selector switch. Moving the cam position selector switch in a first direction releases the cam position selector switch from the cassette frame. Moving the cam position selector switch in a second direction after releasing the cam position selector switch from the cassette frame adjusts a position of the cam relative to the cassette frame. The second direction is approximately perpendicular to the first direction.

[0009] Other principal features and advantages of the invention will become apparent to those skilled in the art upon review of the following drawings, the detailed description, and the appended claims.

## BRIEF DESCRIPTION OF THE DRAWINGS

[0010] Exemplary embodiments of the invention will hereafter be described with reference to the accompanying drawings, wherein like numerals denote like elements.

[0011] FIG. **1** is a perspective view of a peristaltic pump head with a cassette in a position to be installed onto the pump in accordance with an exemplary embodiment.

[0012] FIG. **2** is a perspective view of the peristaltic pump head of FIG. **1** with the cassette installed on the pump in accordance with an exemplary embodiment.

[0013] FIG. **3** is a front cross sectional view of the pump head of FIG. **2** with the cassette in accordance with an exemplary embodiment.

[0014] FIG. **4** is a front view of the cassette of FIG. **1** with some hidden parts illustrated with dashed lines in accordance with an exemplary embodiment.

[0015] FIG. **5** is a front perspective view of the cassette of FIG. **1** in accordance with an exemplary embodiment.

## DETAILED DESCRIPTION

[0016] With reference to FIG. **1**, a peristaltic pump head **2** of a peristaltic pump is shown in accordance with an

exemplary embodiment. The peristaltic pump may include peristaltic pump head **2** and an actuator. Peristaltic pump head **2** may include a crankcase **4**, a frame **5**, a plurality of rollers **8**, and a cassette **18**. Frame **5** may include a center support **10**, a front wall **12**, a back wall **14**, and two braces **20**. Crankcase **4** mounts to front wall **12** and includes an axis of symmetry **6**. As used in this disclosure, the term "mount" includes join, unite, connect, associate, insert, hang, hold, affix, attach, fasten, bind, paste, secure, bolt, screw, rivet, solder, weld, and other like terms.

[**0017**] In the exemplary embodiment of FIG. **1**, the plurality of rollers **8** includes eight rollers symmetrically arranged around the axis of symmetry **6**. The rollers are mounted in a rotating fashion on central support **10**. In the exemplary embodiment of FIG. **1**, each roller of the plurality of rollers **8** has a spherical shape and rotates about an axis parallel to the axis of symmetry **6**. Central support **10** rotates around the axis of symmetry **6**.

[**0018**] The actuator is operably coupled to rotate the plurality of rollers **8**. For example, the actuator may include a rotor connected to the plurality of rollers through a shaft **11** as known to those skilled in the art. The actuator may be any device as known to those skilled in the art for causing rotation of the plurality of rollers. Exemplary actuators include an electric motor, a servo, stepper, or piezo motor,a pneumatic actuator, a gas motor, etc.

[**0019**] Front wall **12** and back wall **14** define between them a housing **16** sized to accommodate one or more cassettes **18**. Front wall **12** and back wall **14** are linked together by the two braces **20** which extend parallel to the axis of symmetry **6**, and act as a support and locking mechanism for cassette **18**. With reference to FIG. **1**, cassette **18** is shown released from the two braces **20**. With reference to FIG. **2**, cassette **18** is shown mounted to the two braces **20** for use with the peristaltic pump. Cassette **18** may or may not be removable from the peristaltic pump in alternative embodiments. A plurality of cassettes **18** can be held in housing **16** as indicated in FIG. **2**, side by side, parallel to one another, and/or in contact with each other. When mounted to frame **5**, cassette **18** extends parallel to front wall **12** and back wall **14** in a plane, which is perpendicular to the axis of symmetry **6**.

[**0020**] With reference to FIG. **5**, a front perspective view of cassette **18** is shown in accordance with an exemplary embodiment. Each cassette is basically flat. Cassette **18** includes a cassette frame **22**. In the exemplary embodiment of FIG. **5**, cassette frame **22** has essentially an inverted U shape formed by a front wall **36** and a back wall (not shown) with a frame edge **26** extending between front wall **36** and the back wall. A cavity **30** (shown with reference to FIG. **4**) is formed between front wall **36** and the back wall. The inverted U shape of cassette frame **22** formed by front wall **36** and the back wall includes legs **28** which extend from a top brace **29**.

[**0021**] Cassette frame **22** may include notches **25** located near the lower ends of legs **28** opposite top brace **29**. Cassette **18** mounts and locks onto peristaltic pump head **2** at the ends of legs **28** adjacent notches **25**. For example, a hook **31** extends from at least one of the legs **28** and mounts to at least one of the braces **20** of frame **5**. A peripheral edge **61** in frame edge **26** defines a portion of a slot **53** within which a knob **60** is configured to move.

[**0022**] Cassette **18** includes a cam **32** accommodated in cavity **30**. Cam **32** has an essentially flat rectangular shape with a saddle-shaped hollow formed by a lower edge **34** designed to face the plurality of rollers **8**. Front wall **36** and the back wall partially cover each side of cam **32**.

[**0023**] With reference to FIG. **3**, a front cross sectional view of cassette **18** mounted to frame **5** is shown in accordance with an exemplary embodiment. A flexible tube **24** is mounted to cassette frame **22** in a removable manner. In particular, flexible tube **24** is held in notches **25**. Tube **24** rests against lower edge **34** of cam **32**. The part of tube **24** resting against lower edge **34** extends between the parts of tube **24** housed in notches **25**. Cassette **18** includes a biasing member **38**. In an exemplary embodiment, biasing member **38** is a blade spring.

[**0024**] With reference to FIG. **4**, a front view of cassette **18** with some hidden parts illustrated with dashed lines is shown in accordance with an exemplary embodiment. Cassette **18** includes a cam position selector switch **56**. In the exemplary embodiment of FIG. **4**, cam position selector switch **56** includes a first edge **55**, a second edge **62**, and knob **60**. First edge **55** includes a plurality of ridges. The plurality of ridges may have a scalloped or serrated shape. Second edge **62** is generally opposite first edge **55** and is inclined relative to first edge **55**. Knob **60** extends from first edge **55** in a direction opposite second edge **62**.

[**0025**] Cassette frame **22** may include a peripheral wall **63** which extends from peripheral edge **61** and defines slot **53** within which knob **60** is configured to move. Cassette frame **22** further may include an interior surface **57**, which extends from peripheral wall **63** in a generally perpendicular direction to peripheral wall **63**. Interior surface **57** defines a surface of a hollow **54** formed within top brace **29**. Cam position selector switch **56** is received within slot **53** and hollow **54** of cassette frame **22**.

[**0026**] In the exemplary embodiment of FIG. **4**, interior surface **57** includes a second plurality of ridges. The plurality of ridges of first edge **55** of cam position selector switch **56** are configured to abut the second plurality of ridges of interior surface **57** of cassette frame **22**. As a result, the plurality of ridges of first edge **55** of cam position selector switch **56** and the second plurality of ridges of interior surface **57** form a series of cogs which engage with each other.

[**0027**] Cassette frame **22** further may include a push button **50** mounted for movement in a first direction within hollow **54**. Push button **50** may have the general shape of a rectangular parallelepiped. The underside of push button **50** may be in contact with an upper side of the center of biasing member **38**. The underside of push button **50** may be mounted to the upper side of the center of biasing member **38**. Push button **50** slides within two channels **52** located within top brace **29**. The channels extend generally perpendicular to the elongate direction of top brace **29** so that push button **50** may move vertically.

[**0028**] A center of biasing member **38** extends near a central part of top brace **29**. In the exemplary embodiment of FIG. **4**, biasing member **38** includes two tips **27**. Hooks **40** may extend from an upper edge **41** of cam **32** generally opposite lower edge **34**. Cam **32** mounts to biasing member **38** near the tips **27**, for example, using the hooks **40**. The tips

**27** are visible through openings **42** located in front wall **36** and the back wall of cassette frame **22**. As a result, cam position selector switch **56** rests against push button **50** which contacts biasing member **38**, which acts downwards on cam **32**, which in turn acts downwards on tube **24** and towards the plurality of rollers **8**. Cam position selector switch **56** thereby provides a control of the cam's compression force on tube **24**.

[**0029**] Moving knob **60** of cam position selector switch **56** in the first direction, which defines the direction of movement of push button **50**, releases first edge **55** of cam position selector switch **56** from the second plurality of ridges of interior surface **57** of cassette frame **22**. In the exemplary embodiment of FIG. **4**, the first direction is towards cam **32**. Moving knob **60** of cam position selector switch **56** in a second direction after releasing cam position selector switch **56** from cassette frame **22** adjusts a position of cam **32** relative to cassette frame **22** due to the inclined surface of second edge **62**. Cam **32** moves toward or away from the plurality of rollers **8** depending on the direction of the slope of second edge **62** and the direction of movement, by the user, of knob **60**. The second direction is approximately perpendicular to the first direction and in the elongate direction of top brace **29**. Releasing cam position selector switch **56** causes the plurality of ridges of first edge **55** to again abut the second plurality of ridges of interior surface **57** though possibly with a different alignment of ridges. Releasing cam position selector switch **56** holds cam position selector switch **56** in position through the interaction of the plurality of ridges of first edge **55** which cooperate with the second plurality of ridges of interior surface **57** and through the compression force exerted by biasing member **38**.

[**0030**] The upper side of cassette **18** can be marked to indicate various positions of cam position selector switch **56** corresponding to a predetermined compression strength. A scale can therefore be used to identify and to control the compression strength For example, the scale may be based on the diameter of tube **24** used. By placing cam position selector switch **56** on top of cassette **18**, it is easy to control, to read, and to repeat the setting of the desired compression force. Use of push button **50**, an intermediate part, helps prevent transmission of lateral forces between cam position selector switch **56** and cam **32**. Cassette **18** may not include a biasing member **38** such that push button **50** may directly contact cam **32** to provide the position adjustment.

[**0031**] The method and system described provide control of the compression force on tube **24**. For example, depending on the diameter of tube **24**, the compression force can be optimized for the desired flow rate and pressure based on certain characteristics of the fluid flowing through tube **24**. Additionally, an improved efficiency and a longer tube lifetime can be achieved. Moving cam position selector switch **56** changes the compression of biasing member **38**, and therefore, by interaction, the strength of the compression force on tube **24** via cam **32**. The complementary shape of the plurality of ridges ensures that cam position selector switch **56** remains in its resting position, while permitting modulation of the compression force simply and quickly.

[**0032**] The foregoing description of exemplary embodiments of the invention have been presented for purposes of illustration and of description. It is not intended to be exhaustive or to limit the invention to the precise form disclosed, and modifications and variations are possible in light of the above teachings or may be acquired from practice of the invention. The embodiments were chosen and described in order to explain the principles of the invention and as practical applications of the invention to enable one skilled in the art to utilize the invention in various embodiments and with various modifications as suited to the particular use contemplated. It is intended that the scope of the invention be defined by the claims appended hereto and their equivalents.

What is claimed is:

**1**. A cassette for use in a peristaltic pump, the cassette comprising:

a cassette frame configured to mount to a peristaltic pump and to receive a tube;

a cam;

a cam position selector switch; and

a biasing member mounted to the cam and to the cassette frame and operably coupled with the cam position selector switch so that movement of the cam position selector switch adjusts a position of the cam relative to the cassette frame.

**2**. The cassette of claim 1, wherein the cam position selector switch comprises:

a first edge, the first edge including a plurality of ridges;

a second edge, the second edge generally opposite the first edge, the second edge inclined relative to the first edge; and

a knob extending from the first edge.

**3**. The cassette of claim 2, wherein the cassette frame comprises an exterior surface and a peripheral wall, wherein the peripheral wall includes a peripheral edge in the exterior surface, the peripheral wall defining a slot within which the knob is configured to move.

**4**. The cassette of claim 3, wherein the cassette frame includes an interior surface, the interior surface extending from the peripheral wall and including a second plurality of ridges, wherein the plurality of ridges are configured to abut the second plurality of ridges.

**5**. The cassette of claim 4, wherein the cassette frame includes a push button mounted for movement in a first direction, wherein the second edge contacts the push button to cause the movement in the first direction.

**6**. The cassette of claim 5, wherein the biasing member mounts to the push button.

**7**. The cassette of claim 6, wherein the biasing member is a blade spring mounted to the push button near a center of the blade spring.

**8**. The cassette of claim 7, wherein the blade spring includes a first tip and a second tip opposite the first tip, and further wherein the cam mounts to the blade spring near the first tip and near the second tip.

**9**. A peristaltic pump, the peristaltic pump comprising:

a pump frame;

a plurality of rollers configured to mount to the pump frame;

an actuator operably coupled to move the plurality of rollers;

a cassette, the cassette comprising

a cassette frame configured to mount to the pump frame and to receive a tube;

a cam positioned to compress the received tube against the plurality of rollers;

a cam position selector switch; and

a biasing member mounted to the cam and to the cassette frame and operably coupled with the cam position selector switch so that movement of the cam position selector switch adjusts a position of the cam relative to the cassette frame.

**10**. The cassette of claim 9, wherein the cam position selector switch comprises:

a first edge, the first edge including a plurality of ridges;

a second edge, the second edge generally opposite the first edge, the second edge inclined relative to the first edge; and

a knob extending from the first edge.

**11**. The cassette of claim 10, wherein the cassette frame comprises an exterior surface and a peripheral wall wherein the peripheral wall includes a peripheral edge in the exterior surface, the peripheral wall defining a slot within which the knob is configured to move.

**12**. The cassette of claim 11, wherein the cassette frame includes an interior surface, the interior surface extending from the peripheral wall and including a second plurality of ridges, wherein the plurality of ridges are configured to abut the second plurality of ridges.

**13**. The cassette of claim 12, wherein the cassette frame includes a push button mounted for movement in a first direction, wherein the second edge contacts the push button to cause the movement in the first direction.

**14**. The cassette of claim 13, wherein the biasing member mounts to the push button.

**15**. The cassette of claim 14, wherein the biasing member is a blade spring mounted to the push button near a center of the blade spring.

**16**. The cassette of claim 15, wherein the blade spring includes a first tip and a second tip opposite the first tip, and further wherein the cam mounts to the blade spring near the first tip and near the second tip.

**17**. The cassette of claim 10, wherein the plurality of ridges are at least one of scalloped and serrated.

**18**. A method of adjusting a position of a cam in a peristaltic pump, the method comprising:

mounting a cassette to a peristaltic pump, the cassette comprising

a cassette frame;

a cam;

a cam position selector switch; and

a biasing member mounted to the cam and to the cassette frame and operably coupled with the cam position selector switch;

moving the cam position selector switch in a first direction to release the cam position selector switch from the cassette frame; and

moving the cam position selector switch in a second direction after releasing the cam position selector switch from the cassette frame to adjust a position of the cam relative to the cassette frame, wherein the second direction is approximately perpendicular to the first direction.

**19**. The method of claim 17, wherein movement of the cam position selector switch in the second direction causes movement of the cam in the first direction.

**20**. The method of claim 17, wherein the cam position selector switch comprises:

a first edge, the first edge including a plurality of ridges;

a second edge, the second edge generally opposite the first edge, the second edge inclined relative to the first edge; and

a knob extending from the first edge.

* * * * *