US 20050241970A1

(19) United States

(12) Patent Application Publication

(10) Pub. No.: US 2005/0241970 A1

(43) Pub. Date: Nov. 3, 2005

Choi

(54) MEDIA DISC STORAGE DEVICE

(76) Inventor: King Yeung Choi, Hong Kong (CN)

Correspondence Address:
ALIX YALE & RISTAS LLP
750 MAIN STREET
SUITE 1400
HARTFORD, CT 06103 (US)

(21) Appl. No.: 10/834,414

(22) Filed: Apr. 29, 2004

Publication Classification

(51) Int. Cl.[7] B65D 85/57

(52) U.S. Cl. 206/308.1; 206/310; 206/493

(57) ABSTRACT

A media disc storage device has a plurality of disc trays for carrying a media disc. Each disc tray has a first side with a disc recess and a hub for locating the disc in the recess, a second side and parallel edges. The disc trays are successively hinged to one another at their parallel edges so as to fold in a concertina arrangement or to open out to be flat.

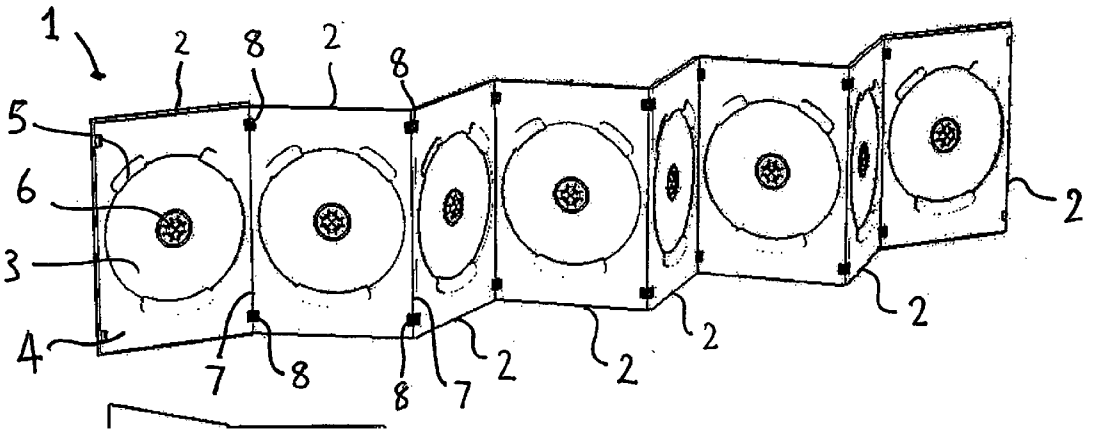

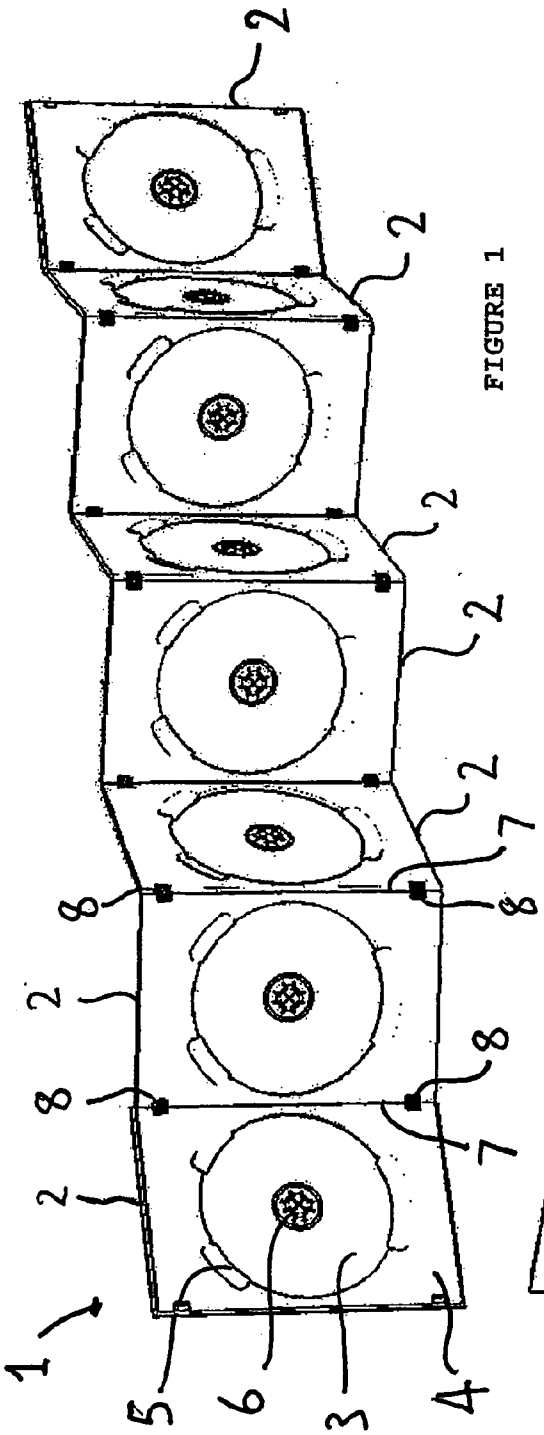

FIGURE 1

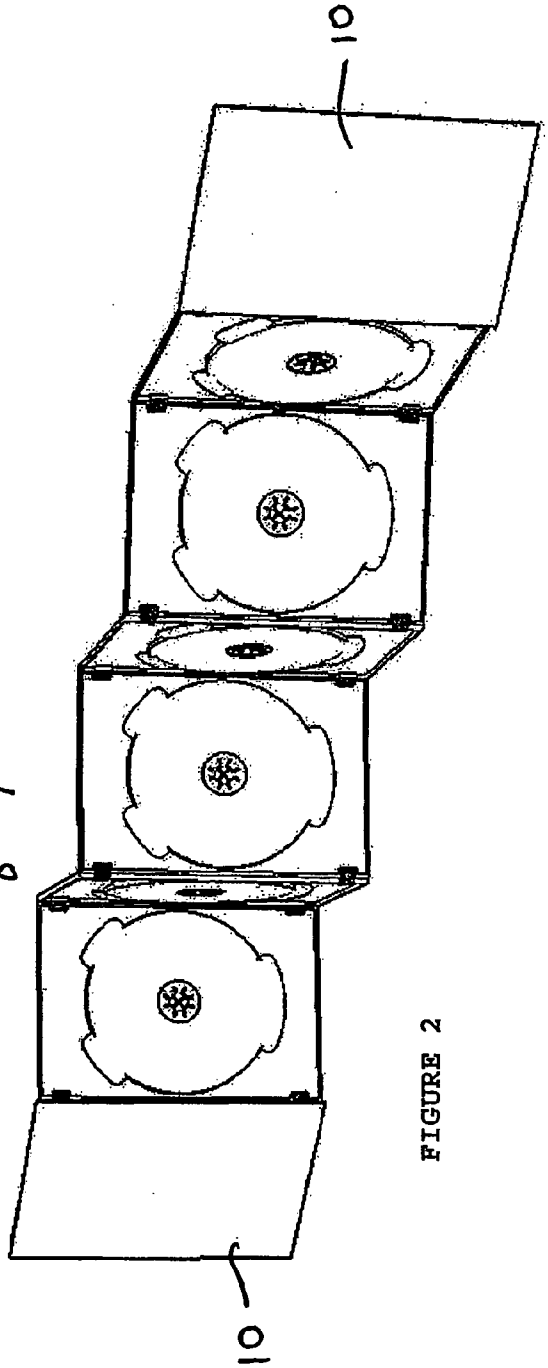

FIGURE 2

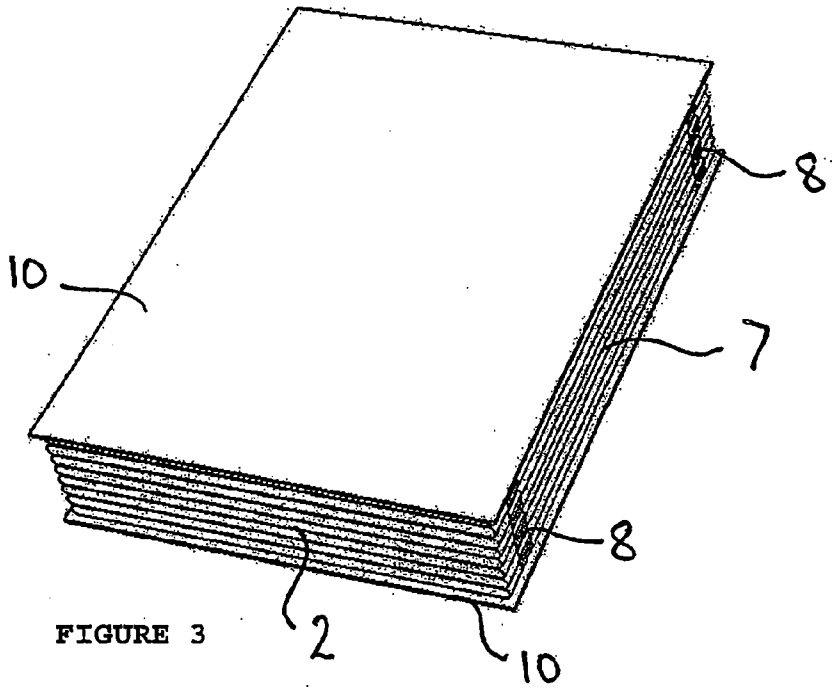

FIGURE 3

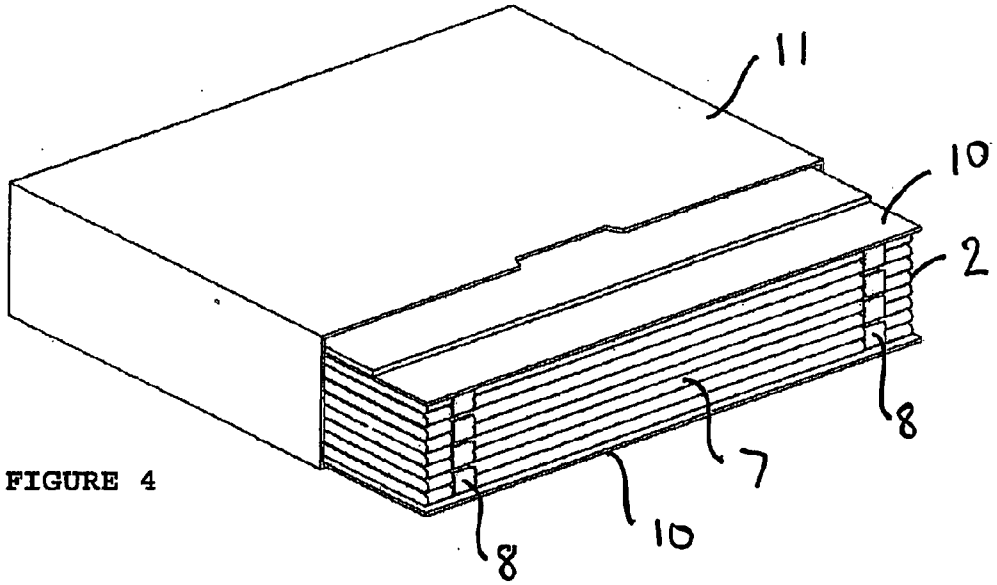

FIGURE 4

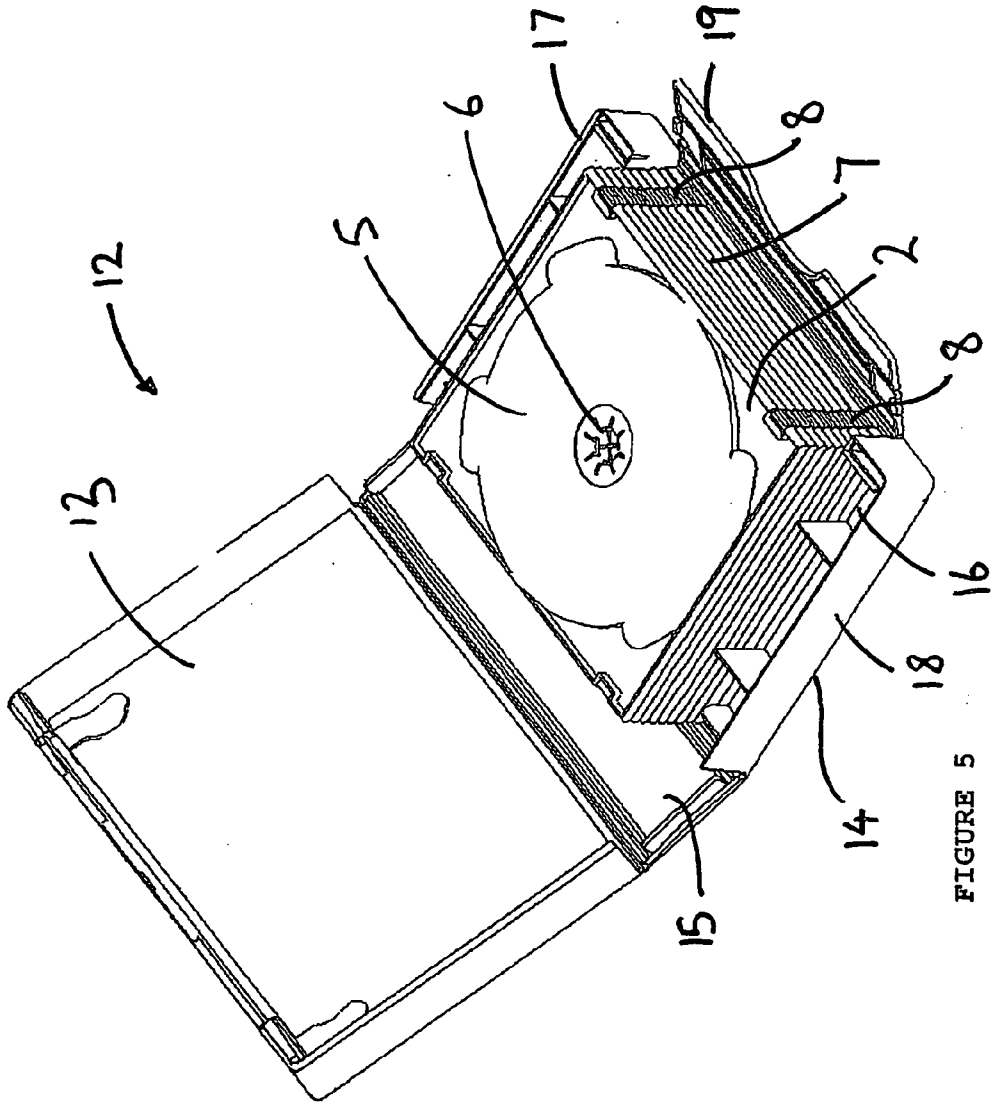

FIGURE 5

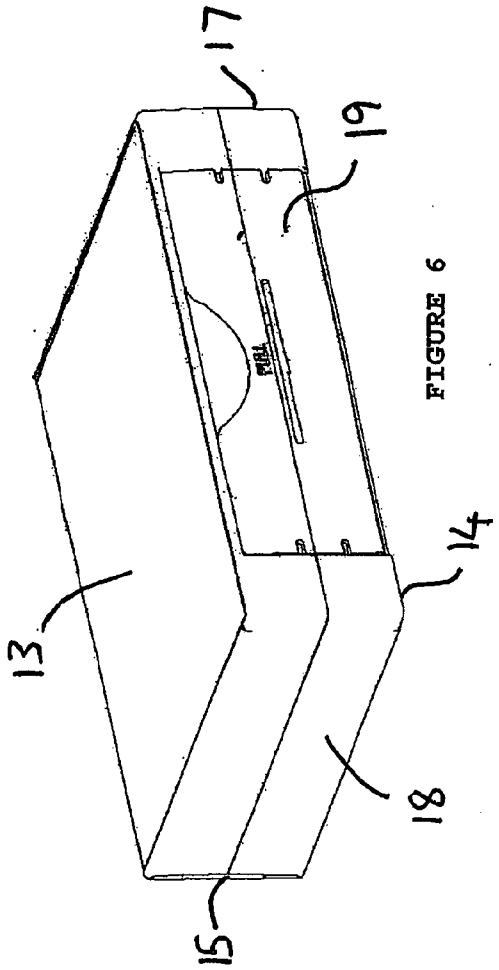

FIGURE 6

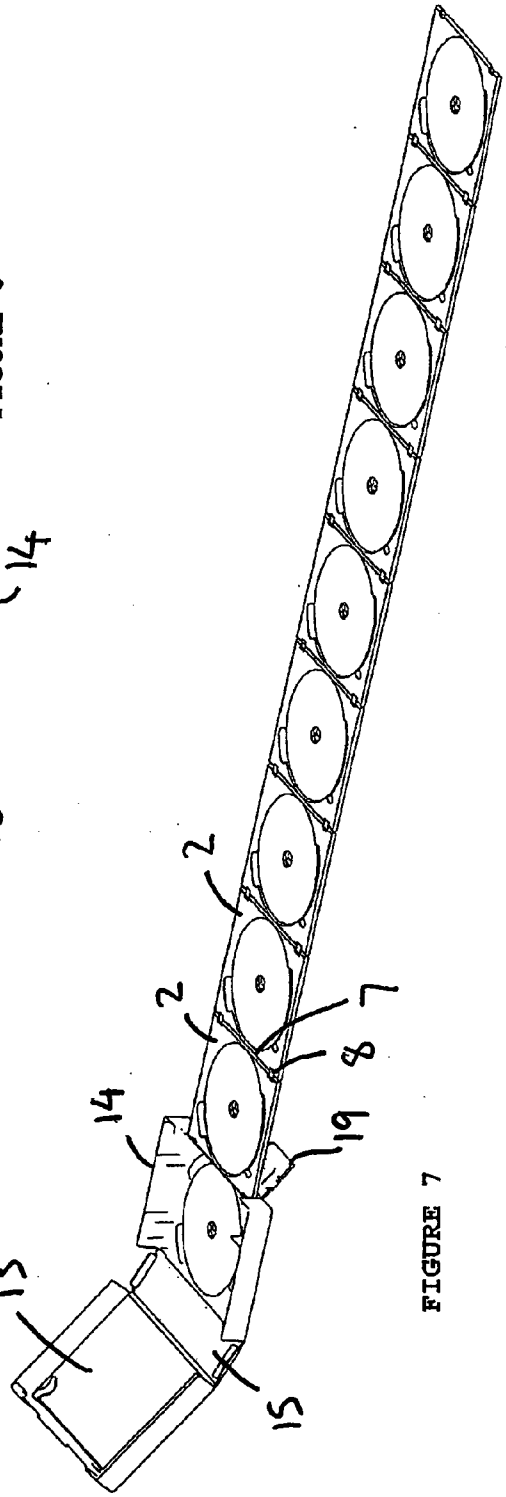

FIGURE 7

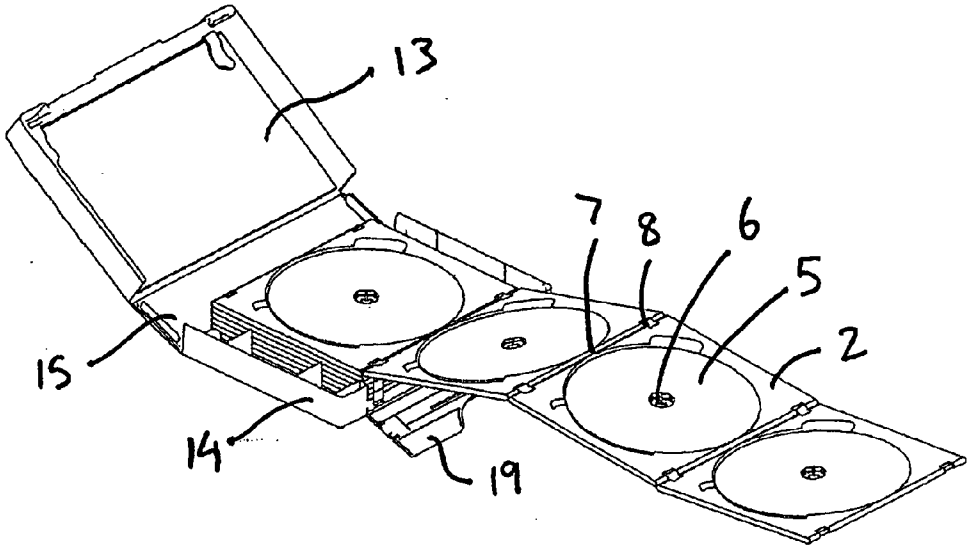

FIGURE 8

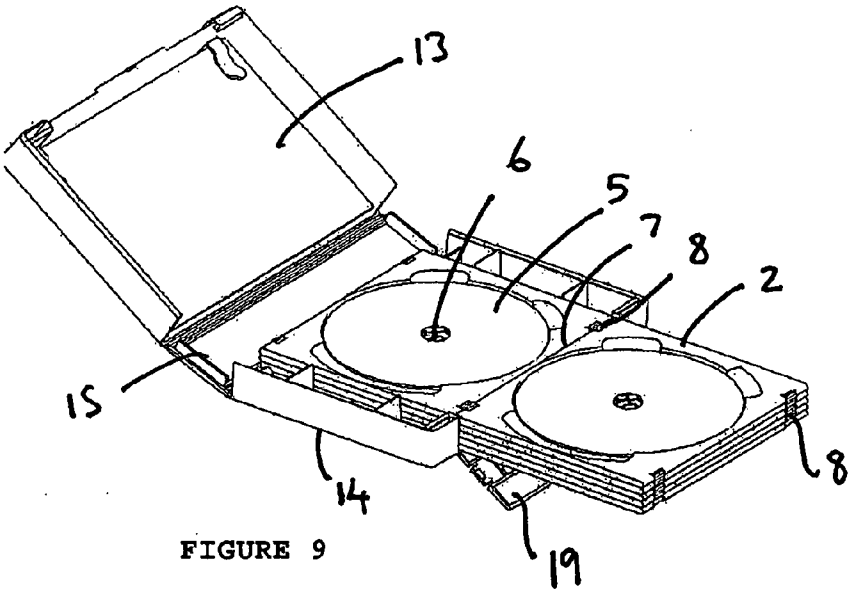

FIGURE 9

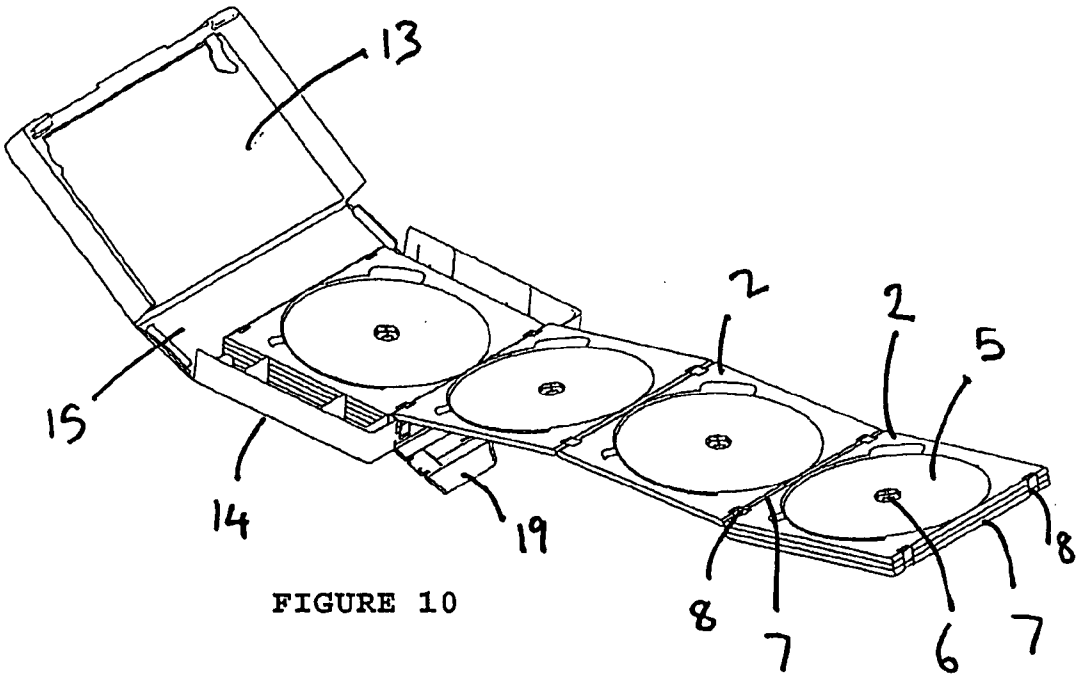

FIGURE 10

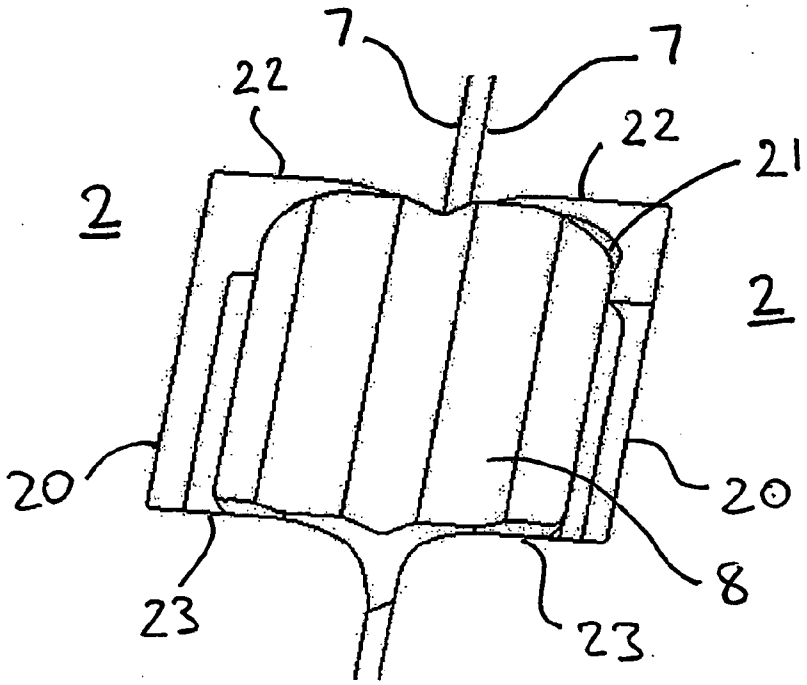

FIGURE 11

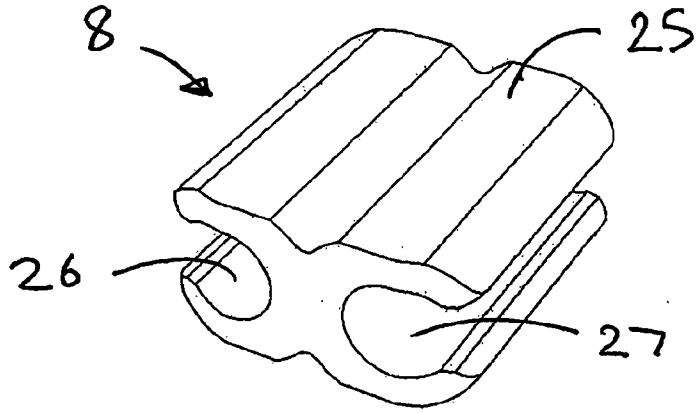

FIGURE 12

MEDIA DISC STORAGE DEVICE

BACKGROUND OF THE INVENTION

[0001] 1. Field of the Invention

[0002] The present invention relates a media disc storage device for compact discs (CD), DVDs, CD-ROMs and the like.

[0003] 2. Background Information

[0004] A variety of media disc storage devices are known. The most common type is a plastic case having front and back covers hinged at a spine and defining a disc storage area between them. One of the covers has a disc recess with a centrally located hub on an inner surface. The cover provides storage for one disc. For storage of more than one disc one or more disc trays are located between the covers. The disc trays are hinged to the case and provided with a disc recess with centrally located hub on one or both surfaces for holding one or more extra discs. There is a practical limitation to the number of such trays that can be accommodated within the cover before its size becomes too large for convenient handling and storage, and detracts from its appeal.

[0005] An alternative arrangement for storing multiple discs is to mount a plurality of disc trays on a strip of glossy stiff card. The card is creased between the trays so that it can be folded several times to enclose the trays. The card can be printed to provide an attractive storage and presentation device for the discs. The disadvantages with the arrangement are that the glossy stiff card is more expensive than plastic and is less durable.

SUMMARY OF THE INVENTION

[0006] It is an object of the present invention to provide a media disc storage device which overcomes or at least ameliorates the above disadvantages. It is another object of the present invention to provide a media disc storage device suitable for storage of multiple discs.

[0007] According to the invention there is provided a media disc storage device including a plurality of disc trays for carrying a media disc, each disc tray having a first side with a disc recess and a hub for locating the disc in the recess, a second side and parallel edges, and wherein the disc trays are successively hinged to one another at their parallel edges so as to fold in a concertina arrangement or to open out to be flat.

[0008] Preferably, a first disc tray and a last disc tray of the plurality of disc trays are provided with a printable medium on the second surface.

[0009] Preferably, the printable medium is glossy stiff card.

[0010] Preferably, the device includes a sleeve for enclosing the disc trays when folded in the concertina arrangement.

[0011] Preferably, the parallel edge of each disc tray has a notch and a pin provided across notch, and wherein a hinge for successively hinging the disc trays to one another at their parallel edges includes a body having opposed channels for receiving pins of adjacent disc trays.

[0012] Preferably, the device includes a case having top and bottom covers joined at a spine for allowing movement of the top and bottom covers between an open state and closed state defining a storage area between the covers, wherein a first disc tray is secured to the case and the plurality of trays can be whole enclosed within the storage area when fold in the concertina arrangement.

[0013] Preferably, the bottom cover has a pivotal wall.

BRIEF DESCRIPTION OF THE DRAWINGS

[0014] An embodiment of the invention will now be described with reference to the drawings in which:

[0015] **FIG. 1** is a first side view of a media disc storage device according to the invention,

[0016] **FIG. 2** is a second side view of the media disc storage device,

[0017] **FIG. 3 a** perspective view of the media disc storage device,

[0018] FIGS. **4** to **10** show the media disc storage device arranged in a case,

[0019] **FIG. 11** is a view of a hinge joining two disc trays, and

[0020] **FIG. 12** is a perspective view of a hinge element.

DETAILED DESCRIPTION OF THE PREFERRED EMBODIMENT

[0021] The Figures depict a media disc storage device **1** comprising of a plurality of identical disc trays **2** for carrying a plurality of media discs **3** such as CDs, DVDs or CR-ROMs. The first side **4** of each disc tray **2** has a disc recess area **5** and a central hub **6** for locating and releasably holding a disc **3** in the recess **5**. Disc trays of this type are well known in the art.

[0022] The plurality of disc trays **2** are successively joined to one another at their parallel edges **7** by hinges **8**. The successively hinged trays form a chain that can be folded in a concertina arrangement for storage or opened out to be flat for viewing all media discs **3**.

[0023] **FIGS. 11 and 12** illustrate a hinge arrangement for successively hinging the disc trays to one another at their parallel edges **7**. The parallel edge **7** of each adjacent disc tray **2** has a notch **20** in it. A pin **21** is positioned across the notch **20** reaching from one side **22** of the notch to the other side **23**. The hinge **8** includes a body **25** having opposed channels **26**, **27** for receiving pins **22** of adjacent disc trays **2**.

[0024] In the preferred embodiment there are two such hinge arrangements joining each adjacent disc trays. In alternative embodiments there may be more or less hinge arrangements joining each adjacent disc trays. In a single hinge arrangement the notch **20** should extend along a substantial portion of the parallel edge **7** with the hinge **8** being of a corresponding size to provide angular support to the hinge arrangement.

[0025] The first and last discs **2** in the chain have a printable medium **10**, such as glossy stiff card, affixed to their second side. When the chain of trays **2** is folded in the concertina arrangement the printable medium **10** forms front

and back covers that can be printed with information about the discs stored on the trays. This arrangement has the benefit and attraction of the known folded card type disc packaging, but has lower manufacturing costs and is much more durable. The overall thickness of a storage device of the invention is less as there are not one or more layers of card between each disc tray.

[**0026**] In order to complete the storage device into an attractive product a storage sleeve **11** can be provided for keeping the concertinaed disc trays in.

[**0027**] In an alternative embodiment the chain of trays **2** can be enclosed within in a case **12**. The case **12** has top and bottom covers **13**, **14** joined at a spine **15** for allowing movement of the covers **13**, **14** between an open state (shown in **FIG. 5**) and a closed state (shown in **FIG. 6**). The bottom cover **14** has end walls **17**, **18** and a pivotable side wall **19**. The covers **13**, **14** define a storage area **16** for the concertinaed disc trays **2** within the case when in the closed state.

[**0028**] The first disc tray in the chain is secured within the case storage area **16**. When the plurality of trays **2** is folded in the concertina arrangement they can be wholly enclosed within the storage area **16** between the closed covers **13**, **14** of the case **12**. To facilitate opening out of the trays **2** the front wall **19** of the bottom cover **14** is pivoted out of the way, as shown in FIGS. **7** to **10**.

[**0029**] FIGS. **8** to **10** illustrate how the concertinaed chain of trays **2** can be unfolded in various ways to facilitate access to various discs without the need to open out every tray to be flat.

[**0030**] Where in the foregoing description reference has been made to integers or elements having known equivalents then such are included as if individually set forth herein.

[**0031**] While preferred embodiments have been shown and described, various modifications and substitutions may be made thereto without departing from the spirit and scope of the invention. Accordingly, it is to be understood that the present invention has been described by way of illustration and not limitation.

What is claimed is:

1. A media disc storage device comprising a plurality of disc trays for carrying a plurality of media discs, each disc tray having a first side with a disc recess and a hub for locating the disc in the recess, a second side and parallel edges, and wherein the disc trays are successively hinged to one another at their parallel edges so as to fold in a concertina arrangement or to open out to be flat.

2. The device of claim 1 wherein a first disc tray and a last disc tray of the plurality of disc trays are provided with a printable medium on the second surface.

3. The device of claim 2 wherein the printable medium is glossy stiff card.

4. The device of claim 1 further comprising a sleeve for enclosing the disc trays when folded in the concertina arrangement.

5. The device of claim 1 wherein the parallel edges of each disc tray each have a notch and a pin provided across the notch, and wherein the device further comprises a plurality of hinges for successively hinging the disc trays to one another at their parallel edges, each hinge including a body having opposed channels for receiving the pins of adjacent disc trays.

6. A media disc storage device comprising:

a plurality of disc trays for carrying a plurality of media discs, each disc tray having

a first side with a disc recess and a hub for locating the disc in the recess,

a second side, and

parallel edges, the disc trays being successively hinged to one another at their parallel edges so as to fold in a concertina arrangement or to open out to be flat; and

a case having

a top cover,

a bottom cover, and

a spine joining the top and bottom covers, the spine allowing movement of the top and bottom covers between an open state and a closed state, the top and bottom covers and the spine defining a storage area between the covers;

wherein a first of the disc trays is secured to the case and all of the disc trays are encloseable within the storage area when folded in the concertina arrangement.

7. The device of claim 6 wherein the bottom cover has a pivotal wall.

* * * * *