US 20040144013A1

(19) United States

(12) Patent Application Publication

(10) Pub. No.: US 2004/0144013 A1

(43) Pub. Date: Jul. 29, 2004

Leatherwood

(54) RIFLE SCOPE ADJUSTMENT INVENTION

(76) Inventor: James Milner Leatherwood, Lingleville, TX (US)

Correspondence Address:
JAMES M. LEATHERWOOD
BOX 140
LINGLEVILLE, TX 76461 (US)

(21) Appl. No.: 10/351,011

(22) Filed: Jan. 25, 2003

Publication Classification

(51) Int. Cl.[7] F41G 1/38

(52) U.S. Cl. 42/126

(57) ABSTRACT

A vertical adjustment mechanism for weapon's sights such as riflescopes that includes moveable indicator flags for indicating zeros at various ranges. These flags can be moved independently and are separated by spacers that are keyed to the central shaft in to prevent the movement of one flag from disturbing the setting of the other flags. The adjustment also includes a graduated dial that indicated angular change in the adjustment to facilitate the setting of the indicator flags and to provide a zero point for orienting the system. Once adjusted, the entire assembly is locked together by tightening screws that clamp the separate pieces together so it will function as if it was a single unit. The adjustment mechanism can be applied to the internal components of a telescopic sight or to an external mount.

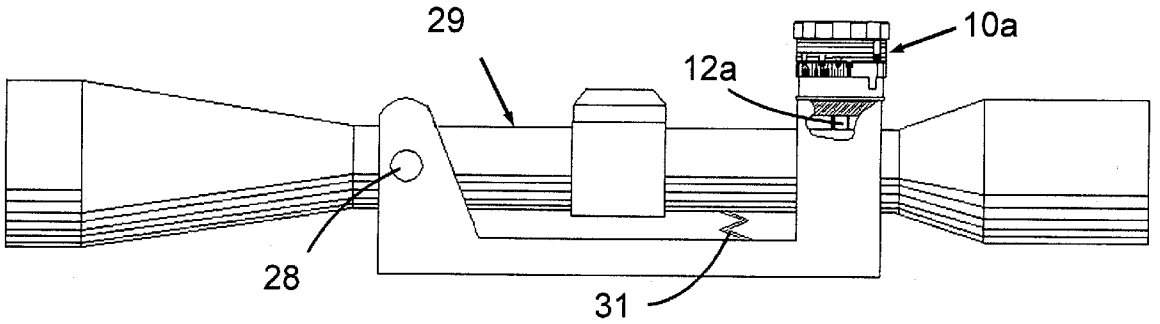

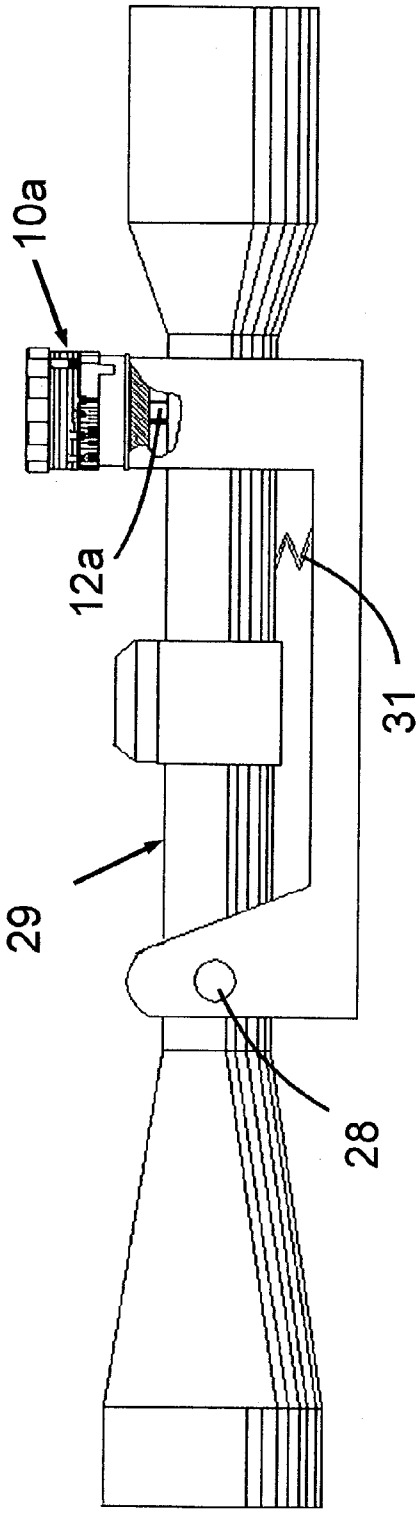

FIG. 6

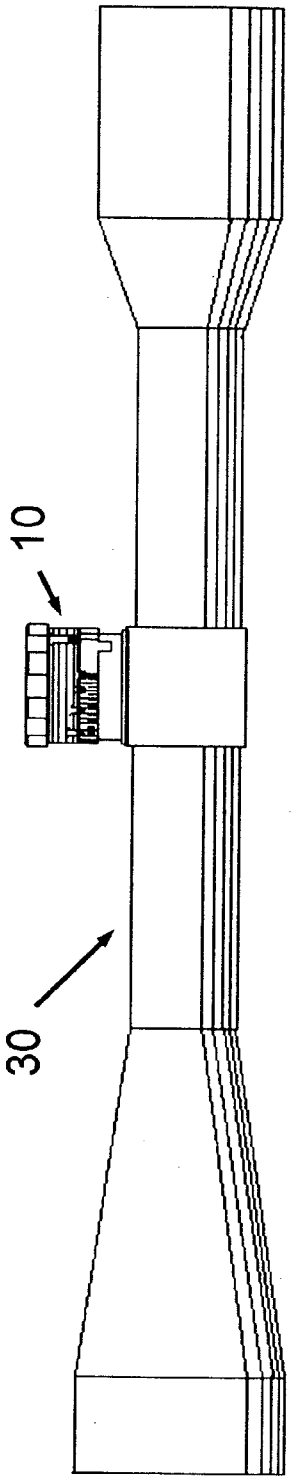

FIG. 1

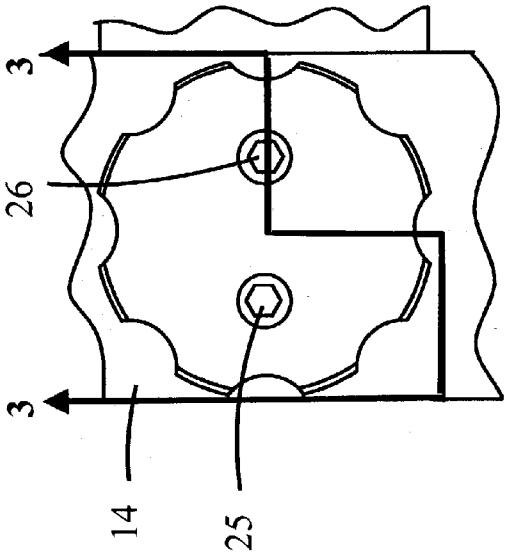

FIG. 2

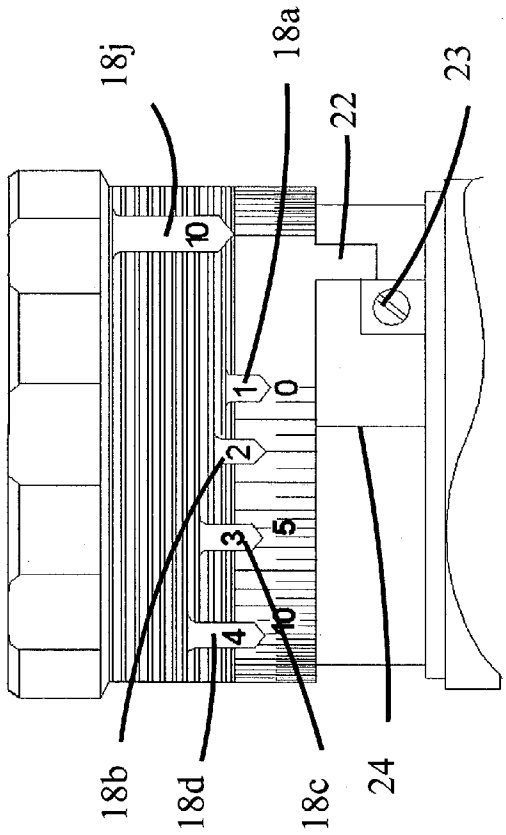

FIG. 5

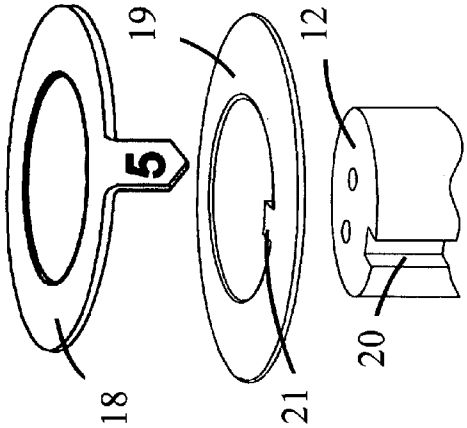

FIG. 4

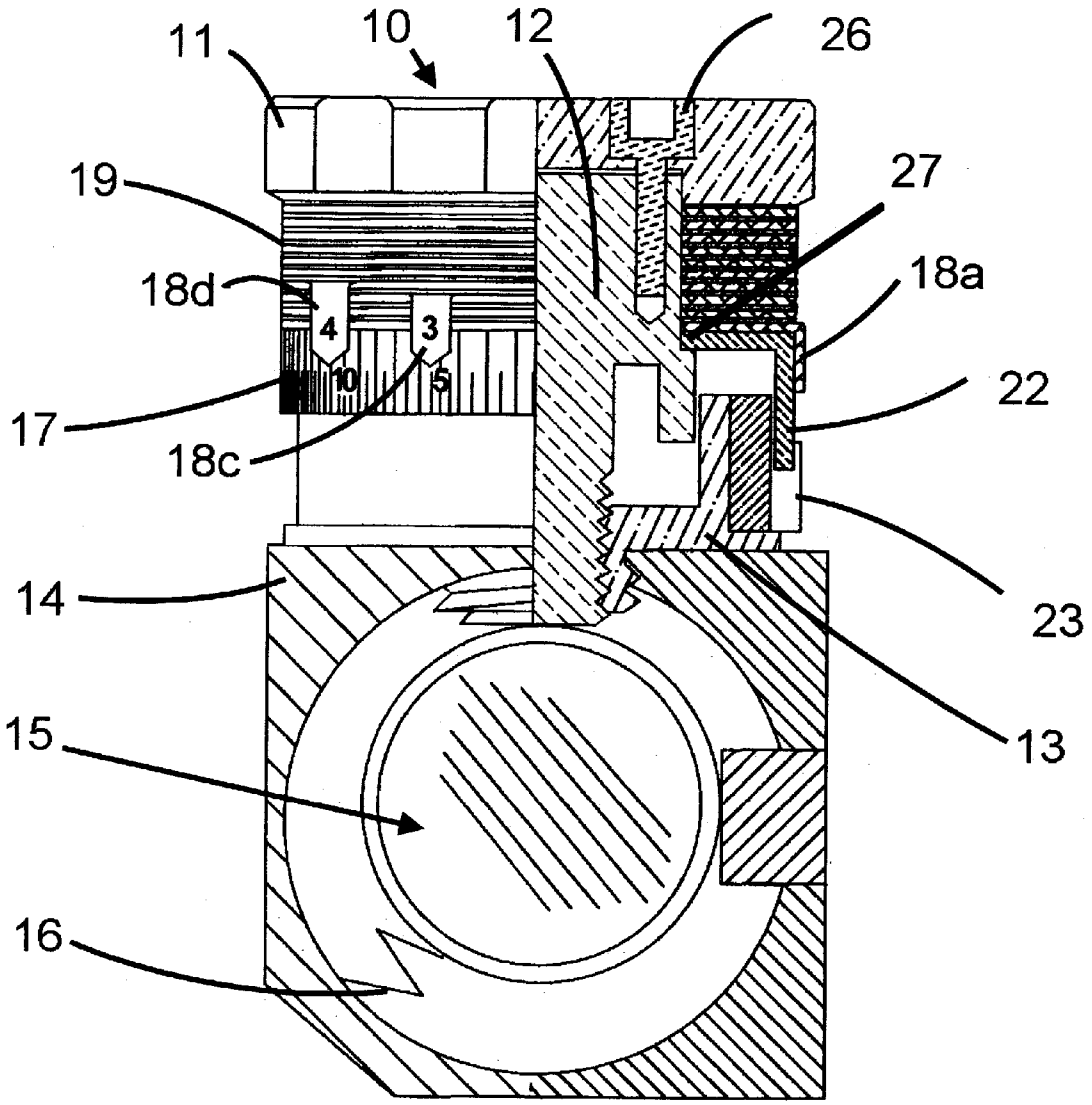

FIG. 3

RIFLE SCOPE ADJUSTMENT INVENTION

BACKGROUND OF THE INVENTION

[0001] 1. Field of the Invention

[0002] The present invention relates to vertical adjustment devices for telescopic weapon's sights and telescopic sight mounts.

[0003] 2. Description of the Prior Art

[0004] For at least a century, pre-calibrated vertical adjustment systems have been used on telescopic rifle and other weapon sights to allow the user to set a predetermined correction for the ballistic path of the weapon's projectile. The problem with this approach is that once calibrated the dial or disk or other display system cannot be altered except by replacement with another dial or disk. Even then it is impossible to accommodate the almost infinite number of potential ballistic paths. This system has been used for both internal and external adjustment systems and has changed little in basic design since the early **1900**'s.

SUMMARY OF THE INVENTION

[0005] The object of the present invention is to provide a vertical adjustment device with means for an infinite number of settings and to be readily adjustable by the user.

[0006] Another object is to enable the user to make the necessary settings either by actual shooting or from mathematically determined data.

[0007] Still another object is to provide a means of setting the individual range markers without disturbing the settings of adjacent range markers.

[0008] These and other objects will become apparent from the following description and the accompanying drawings. For a better understanding of this new and important improvement to vertical adjustment system for riflescopes, reference should be made to the accompanying drawings and descriptive matter in which there are illustrated preferred embodiments of the invention.

BRIEF DESCRIPTION OF THE DRAWINGS

[0009] **FIG. 1** is a side view of the adjustment device according to the invention incorporated in a telescopic rifle sight.

[0010] **FIG. 2** is a top view of the adjustment device showing the section for **FIG. 3**.

[0011] **FIG. 3** is a partial sectional view showing the principal components taken along **3-3** of **FIG. 2**.

[0012] **FIG. 4** is a perspective view of a representative indicator plate, spacer and the main adjusting shaft.

[0013] **FIG. 5** is a view of the rear of the adjustment device, as it would be seen during use of the riflescope.

[0014] **FIG. 6** is a side elevation view of an embodiment of the invention in a riflescope mount.

DESCRIPTION OF THE PREFERRED EMBODIMENTS

[0015] **FIG. 1** shows the invention as an embodiment in a riflescope **30**. **FIG. 3** shows a sectional view along path **3-3** shown on **FIG. 2**. The adjustment assembly **10** contains a finger knob **11** that the user turns to change the zero range of the telescopic sight. The knob **11** is directly attached to a shaft **12** that is in controlled engagement with a housing **13** that is attached directly to the body of the riflescope **14**.

[0016] The internal optical assembly **15** containing some of the rifle scope's optical elements is urged against the end of this shaft **12** by a spring **16** in the scope body **14**. Movement of the optical assembly **15** causes the optical path to move and thereby alters the optical image's relationship to the rifle in a manner well known in the art to adjust the aim of telescopic sights. Moving shaft **12** by rotating the knob **11**, causes the optical element assembly **15** to change the line of sight accordingly.

[0017] Again referring to **FIG. 3**, this sectional view shows the shaft **12** and the graduated ring **16** that is capable of rotating about the shaft **12**. Above the graduated ring **16** are an alternating series of plates that are of two types. One type **18***a-j* carries an indicator or flag that is numbered according to the range that it will indicate. The other type is a spacer **19** that separates the flag indicator plates **18***a-j*. Although the lengths of the flags may vary according to the range they indicate, the function is the same for all of the flag indicator plates **18***a-j*. The spacer plates **19** are all identical and function to separate the flag indicator plates **18***a-j* and keep the movement of one such as **18***b* from also moving a flag indicator plates **18***c* or **18***a* above or below its position.

[0018] To understand how they perform this function, please refer to **FIG. 4**. **FIG. 4** shows a perspective view of shaft **12**, spacer **19** and flag indicator plate **18***e*. A vertical slot **20** is cut in shaft **12**. As shown in the perspective view in **FIG. 4**, the spacer plates **19** each have a key **21** that engages the slot **20**. This prevents the spacer plates **19** from being able to rotate about shaft **12**. Consequently the rotational motion of one of the flag indicator plates **18***a-j* cannot be transmitted to an adjacent flag indicator plate **18***a-j* through the rotation of the spacer plates **19**.

[0019] This allows the user to set the flags on indicator plates **18***a-j* independently and not have a flag on indicator plates **18***a-j* disturbed by the setting of the other indicator plates **18***a-j*.

[0020] To provide a means of referencing the rotation of the adjustment dial **10** in terms of the amount of change between the line of sight and the trajectory path of the weapon's projectile path, the graduated ring **16** can be rotated about the axis of the adjustment to provide a reference scale.

[0021] Once the closest zero position has been established, the graduated ring **16** is set with its stop **22** against the stop **23** located on the adjustment assembly. The closest range zero flag on indicator plate **18***a* is set to the reference line **24**. Then the other indicator plates **18***b-j* can be set to their appropriate positions either by actual shooting or using the graduated ring **16** as a reference for the amount of angular change needed for a zero at the various ranges. Once all the flags on the indicator plates **18***a-j* are set to their positions then the entire assembly is locked together as a single unit by tightening screws **25** and **26**. This squeezes the graduated ring **16**, the spacers **19** and the graduated ring between the shoulder **27** on the shaft **12** and the finger knob **11**. Now the adjustment assembly **10** acts as if it was a one-piece adjustment.

[**0022**] To correct the line of sight to the various ranges, the user simply aligns the appropriate range flag on one of the indicator plates **18***a-j* with the index mark **24** as shown in the rear view shown in **FIG. 5**.

[**0023**] **FIG. 6** shows the embodiment of the invention in an external mount system. This form of the invention **10***a* is essentially the same as the internal application in novel features. As shown in this view the entire scope is pivoted about an axis **28** and a spring means **31** forces the scope **29** against shaft **12***a*.

[**0024**] In this case, shaft **12***a* now moves the entire scope assembly instead of the internal optical component in a manner also well know in the art to adjust the aim of telescopes.

[**0025**] The invention is not limited to the exemplary constructions herein shown and described, but may be made in various ways within the scope of the appended claims.

I claim:

1. In a vertical adjustment means for a telescopic rifle sight, a set of independently moveable indicator means capable of rotation about a central adjusting shaft and a locking means for securing said indicator means to said shaft.

2. The adjustment means of claim 1 in which the said indicator means are separated by a spacer means keyed to said central shaft.

* * * * *