US 20040035779A1

(19) United States

(12) Patent Application Publication

(10) Pub. No.: US 2004/0035779 A1

(43) Pub. Date: Feb. 26, 2004

Vossenkaul et al.

(54) MEMBRANE FILTER FOR WATER TREATMENT

(76) Inventors: **Klaus Vossenkaul**, Aachen (DE); **Stefan Schafer**, Aachen (DE)

Correspondence Address:
WILLIAM COLLARD
COLLARD & ROE, P.C.
1077 NORTHERN BOULEVARD
ROSLYN, NY 11576 (US)

(21) Appl. No.: **10/380,568**

(22) PCT Filed: **Aug. 24, 2001**

(86) PCT No.: **PCT/EP01/09788**

(30) **Foreign Application Priority Data**

Sep. 13, 2000 (DE) 10045227.2

Publication Classification

(51) **Int. Cl.**[7] **B01D 63/00**; B01D 63/02

(52) **U.S. Cl.** **210/321.6**; 210/321.88; 210/321.89

(57) **ABSTRACT**

The invention relates to a membrane filter for water treatment, comprising a head piece (**1**) consisting of a permeate collecting chamber (**2**) with a permeate outlet (**3**), and at least one fiber bundle (**4**) made from capillary membranes, which are poured into the head piece (**1**) with an end that is open towards the permeate collecting chamber (**2**) and sealed on the opposite end thereof. The head piece (**1**) contains an air duct (**16**) to which the mouth piece (**10**) that protrudes into the fiber bundle (**4**) is connected with at least one air outlet (**11**). At its other end, the fiber bundle (**4**) terminates in freely movable manner in the untreated water (**6**).

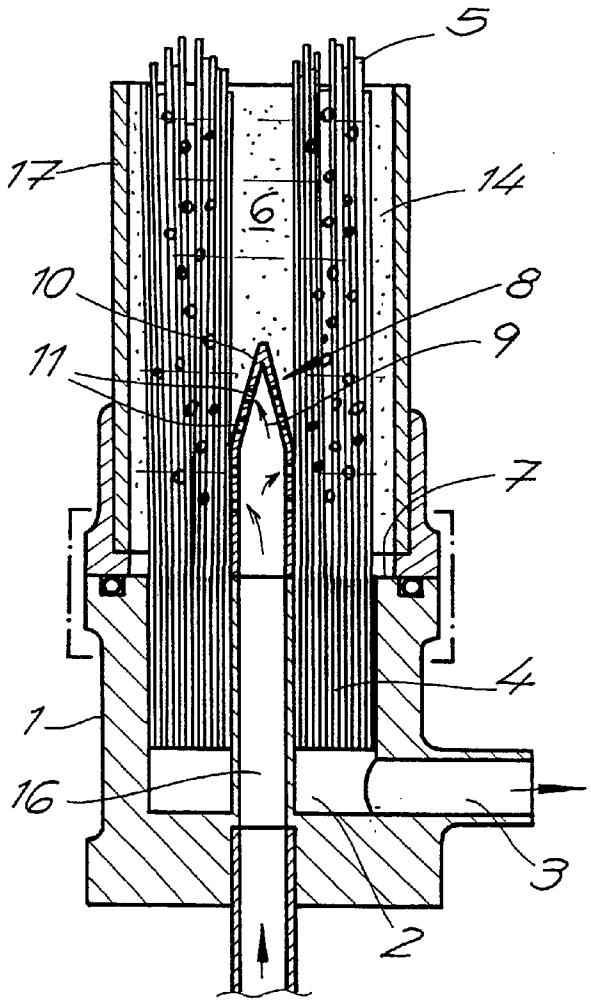

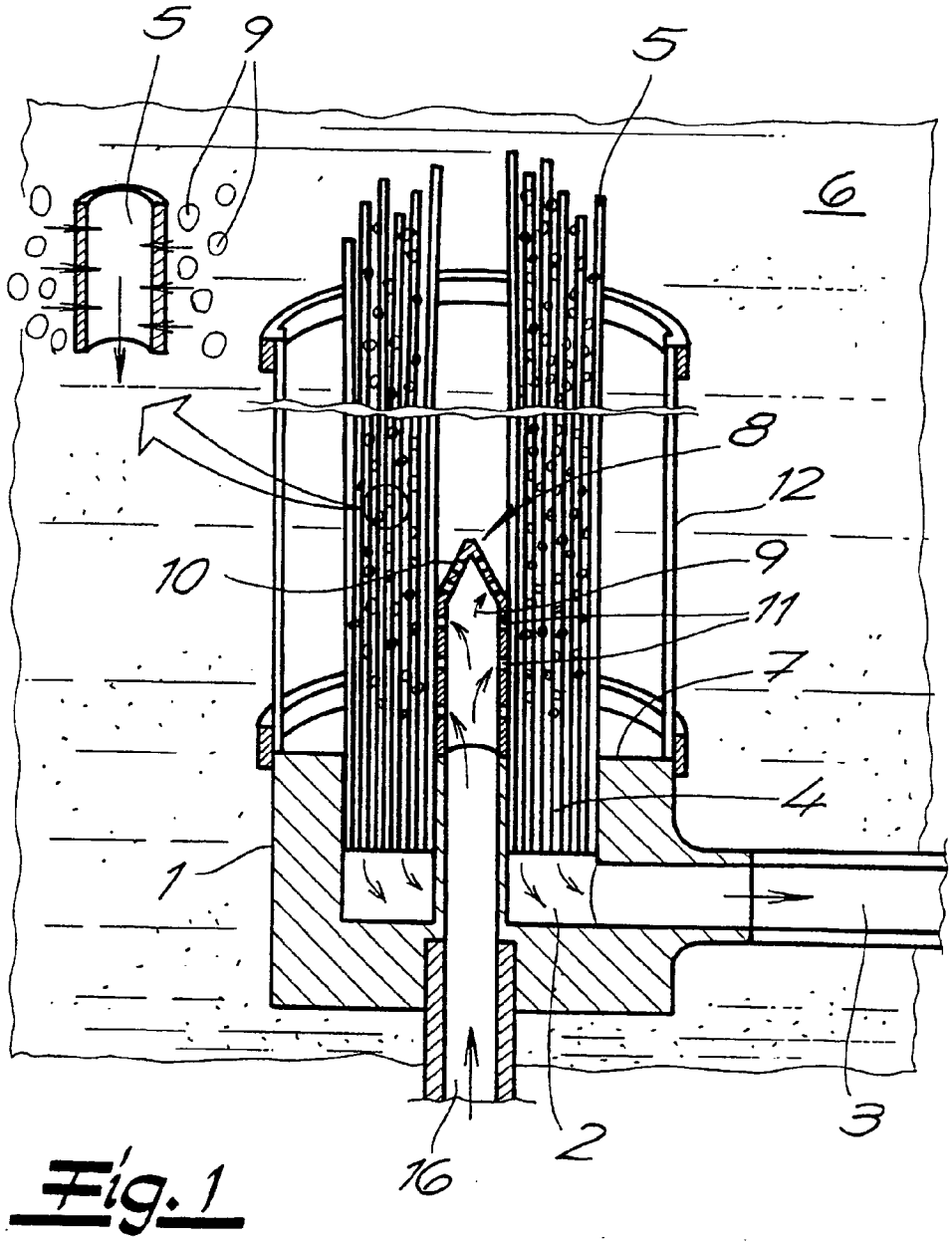

Fig. 1

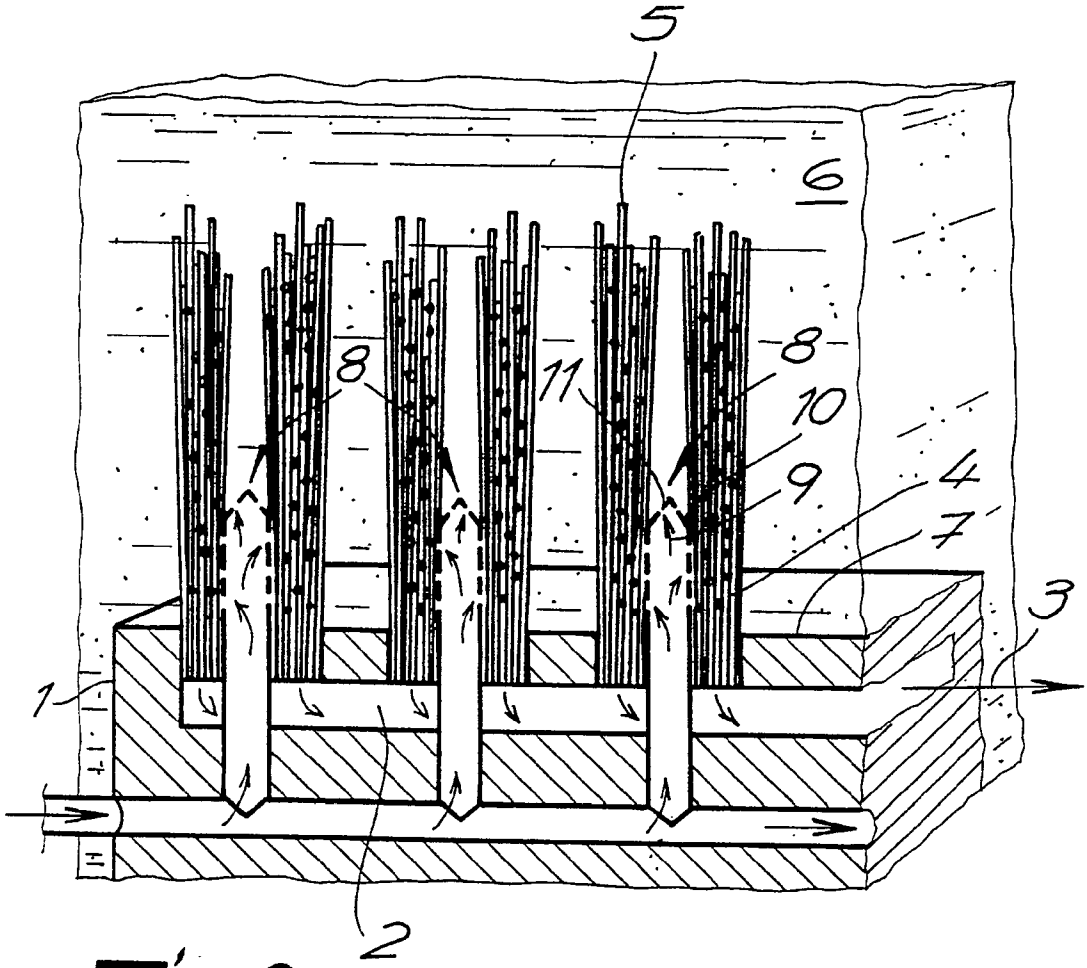

Fig. 2

Fig. 3

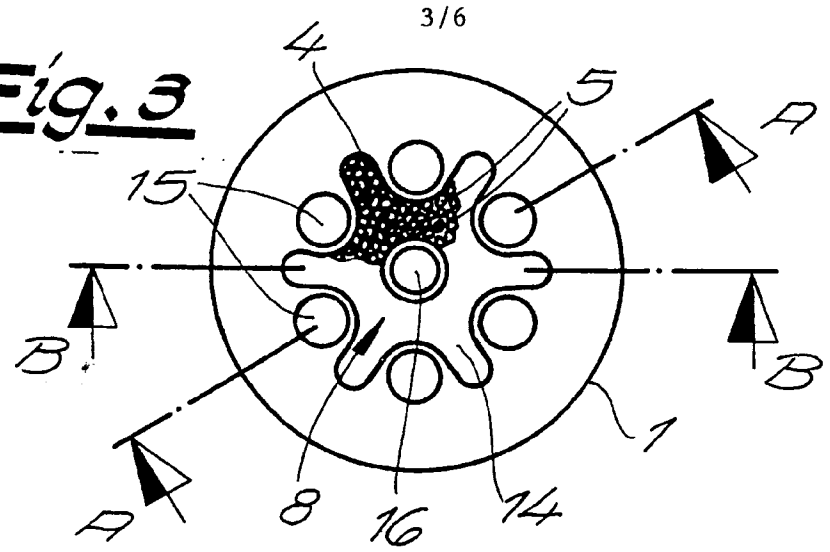

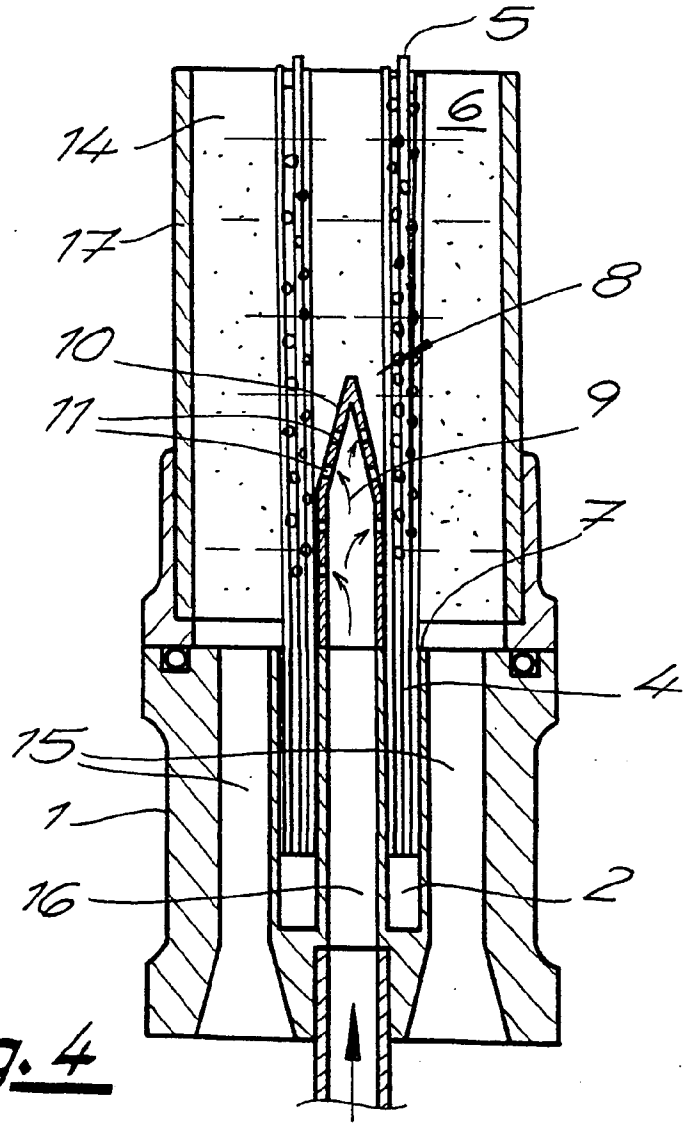

Fig. 4

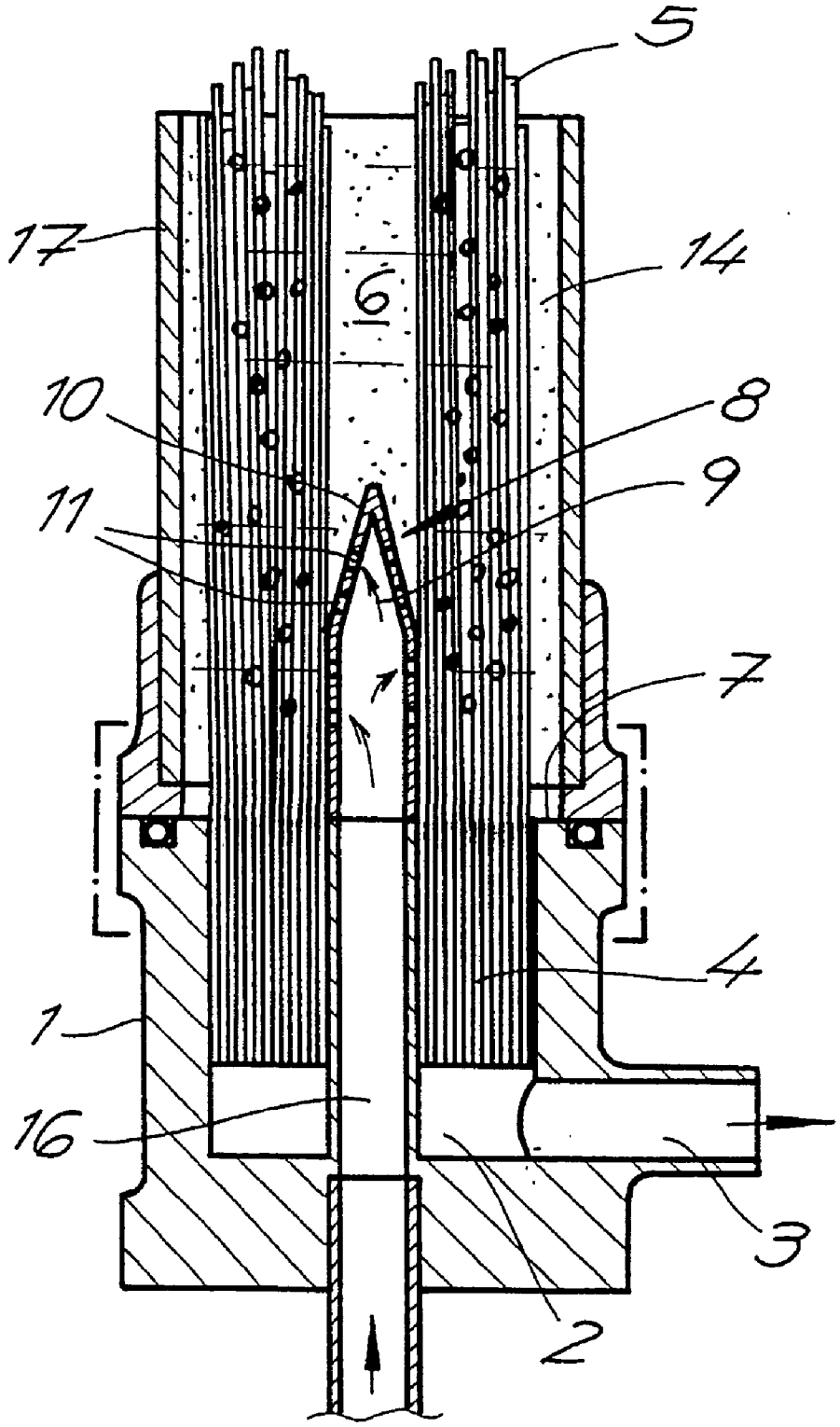

Fig. 5

Fig. 6

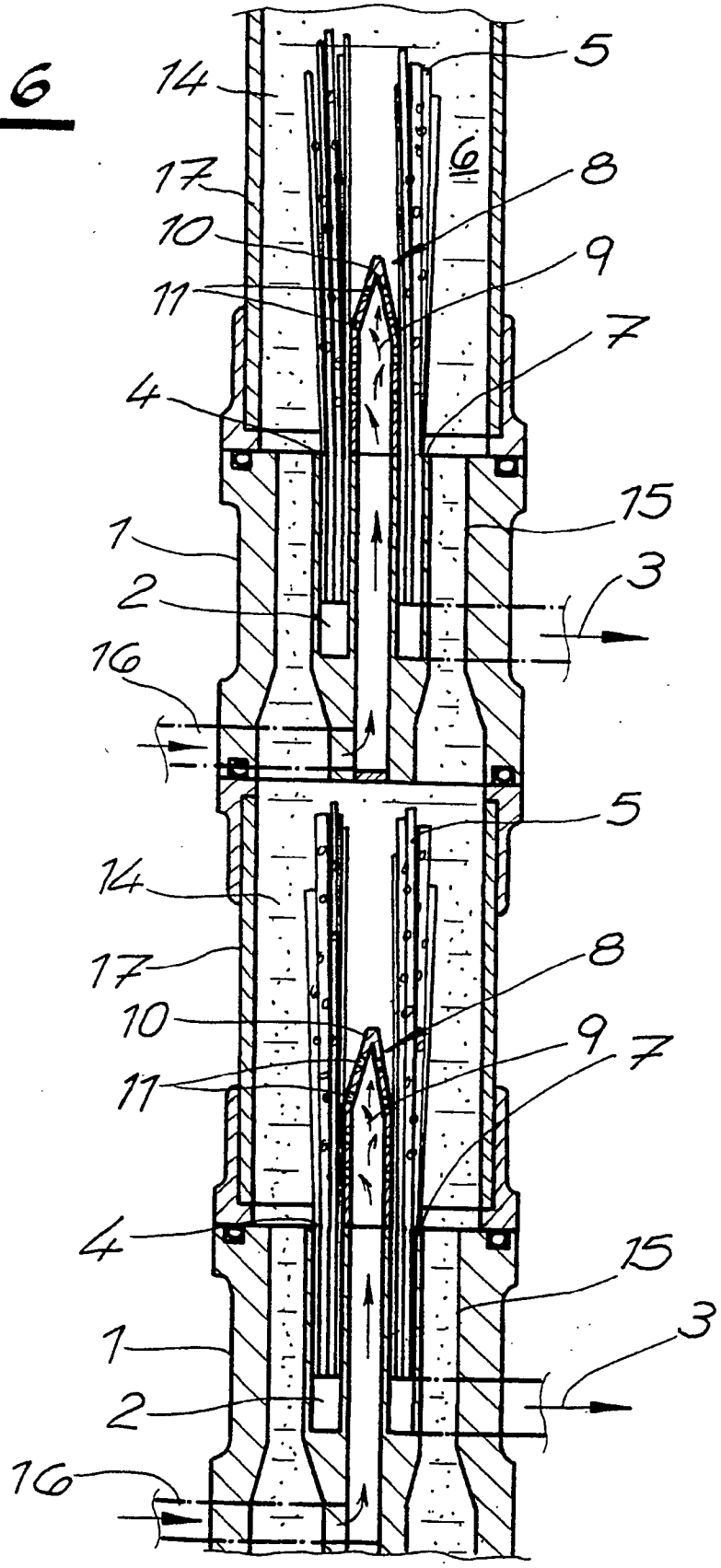

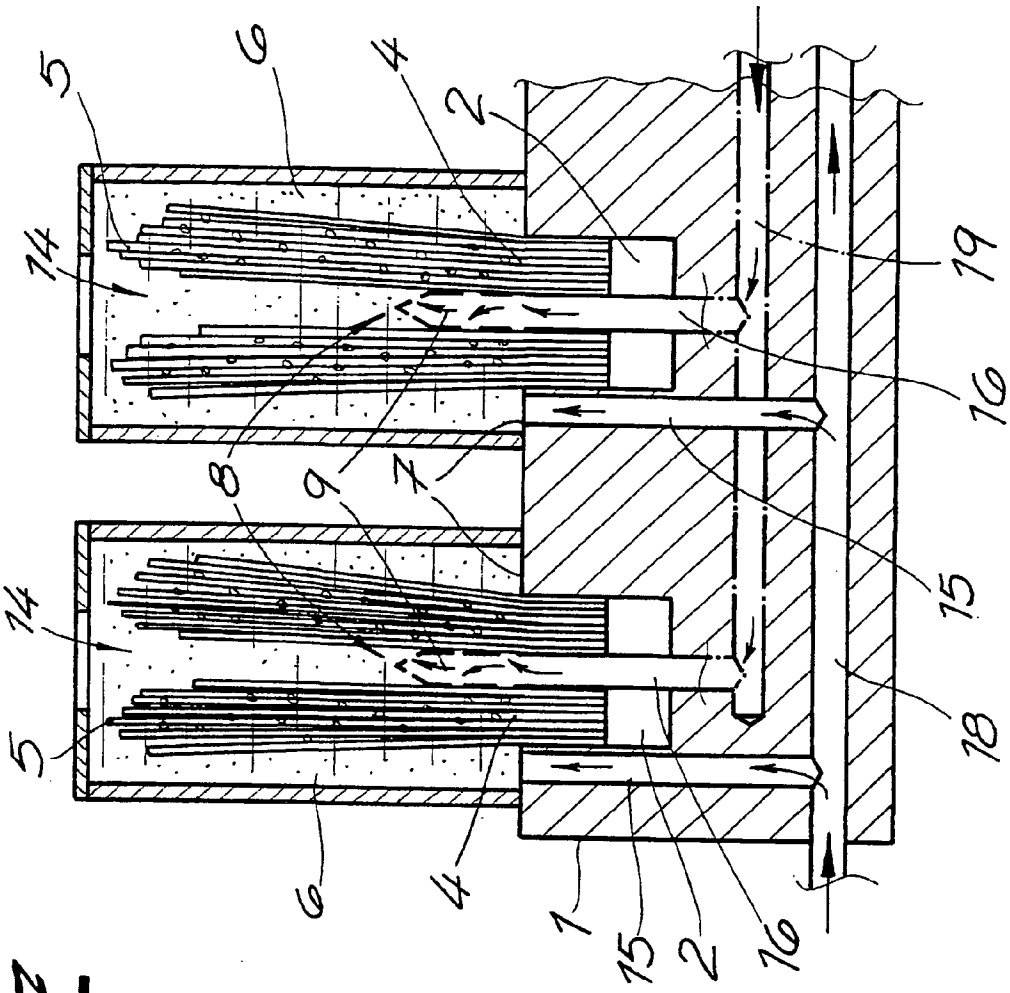

Fig. 7

MEMBRANE FILTER FOR WATER TREATMENT

[0001] The invention relates to a membrane filter for water treatment, comprising

[0002] a head piece consisting of a permeate collecting chamber with a permeate outlet,

[0003] at least one fiber bundle made from capillary membranes, which are poured into the head piece with an end that is open towards the permeate collecting chamber and sealed on the opposite end thereof, and

[0004] a gasification device with a mouth piece that has at least one outlet for air and extends essentially parallel to the capillary membranes, within the fiber bundle,

[0005] whereby the capillary membranes of the fiber bundle that are surrounded by the untreated water to be treated are attached, in a dense packing, to a connecting surface of the head piece, and clarified liquid can be withdrawn in the capillary membranes, to the permeate collecting chamber. The capillary membranes possess a diameter of less than 5 mm and preferably have the permeability of microfiltration membranes or ultrafiltration membranes. However, the use of capillary membranes for reverse osmosis or nanofiltration is not supposed to be precluded. Capillary membranes in a diameter range between 0.5 and 3 mm are preferred. The driving force for the membrane filtration is a pressure difference that can be implemented on the untreated water side by means of an excess pressure and/or on the permeate side by means of a pressure reduction. A pressure reduction on the permeate side is a particular possibility if the membrane filter is supposed to be used in immersion operation and is suspended in a basin that contains the untreated water, e.g. the activated sludge basin of a sewage treatment plant.

[0006] A membrane filter having the characteristics described initially is known from WO 98/28066. The capillary membranes of the membrane filter that can be used in immersion operation are clamped between two head pieces at their ends. A gasification device is connected at the one head piece, which is the lower one in operation. The other, upper end contains the permeate collecting chamber. It forms a displacement body, which has the effect of displacing the rising air bubbles towards the outside of the membrane fiber bundle. Effective gasification is no longer guaranteed in the upper region of the fiber bundle. Here, no membrane movements are possible either, or only slight membrane movements are possible. As a consequence, the formation of membrane cover layers and of gross dirt deposits occurs in the upper region of the fiber bundle.

[0007] In a membrane filter known from DE 198 11 945 A1, the fiber bundle of capillary membranes is set into a pressure-resistant mantle pipe, through which the flow passes in the lengthwise direction of the capillary membranes. The capillary membranes are poured into an in-flow base at their ends, which base has a plurality of bores uniformly distributed over its cross-section, to allow the untreated water to flow through. In order to prevent cover layers from forming on the outside of the capillary membranes, and to prevent the micropores of the capillary membranes from becoming blocked, a uniform flow through the membrane filter chamber, at a defined flow velocity, is required. In order to improve the material exchange, the untreated water can be gasified with air before it enters into the membrane filter chamber. Sufficient air distribution within the fiber bundle is not guaranteed. The air is essentially guided along the outside of the membrane bundle, with the untreated water flow, and does not make any effective contribution to the membrane purification effect.

[0008] The invention is based on the task of indicating a membrane filter for water treatment in which effective gasification over the entire length of the fiber bundle is guaranteed, and an effective transport to remove membrane deposits that come loose from the membrane surfaces is assured.

[0009] Proceeding from a membrane filter having the structure described initially, this task is accomplished, according to the invention, in that the head piece contains an air duct to which the mouth piece that protrudes into the fiber bundle is connected, and that the fiber bundle terminates, at its other end, without being clamped in place, in freely movable manner in the untreated water. The air that exits from the mouth piece flows through the fiber bundle from the inside to the outside, and partially flows away in the lengthwise direction of the capillary membranes. The air feed is preferably supplied intermittently, with the goal of cleaning off cover layers that have formed on the membrane surface during membrane filtration. The air introduction into the fiber bundle, according to the invention, allows surprisingly effective cleaning, independent of the flow velocity of the untreated water. In this regard, the membrane filter according to the invention can also be used in immersion operation.

[0010] The mouth piece possesses a pipe-shaped section, for example, with bores on the circumference, or is structured as a ring gap nozzle, from which the air exits radially or at least with a radial movement component. The air can be introduced into the fiber bundle in targeted manner by means of sizing the length of the mouth piece and by the arrangement of the exit bores or exit nozzles. It also proves to be advantageous if the mouth piece has a kick-back valve that closes if the pressure of the air feed drops.

[0011] The fiber bundle is attached to a connecting surface of the head piece, in a dense packing; in case of immersion operation of the membrane filter, this connecting surface is not penetrated by flow channels for the untreated water. The capillary membranes, which are sealed at their free ends, move in the untreated water to be filtered, since they are only clamped in place at one end. To limit the lateral movements of the fiber bundle, a basket can be set onto the head piece. The basket can be made of rods or, for example, can consist of a pipe that has been provided with openings on its circumference. The head piece can furthermore have connecting devices for attachment to a frame, which can be lowered into a basin that contains the untreated water. It lies within the scope of the invention to structure the head piece in block shape, whereby the permeate run-off takes place at a narrow side surface or at the bottom. Several of these units can be arranged next to one another, in the form of a filter package, whereby it is practical if the permeate outlets are connected with one another by means of a collecting line.

[0012] If the membrane filter is used in immersion operation, no devices are required for making the untreated water flow against the capillary membranes. It also lies within the

scope of the invention to structure the membrane filter with a filter chamber through which liquid flows. It is practical if the flow through the filter chamber takes place in the lengthwise direction of the capillary membranes, whereby the untreated water enters into the filter chamber through bores in the head piece that are arranged concentrically around the gasification device, according to the invention. The capillary membranes are poured into the head piece on a ring-shaped connecting surface between the gasification device and the bores that carry the liquid. According to another, particularly advantageous embodiment, the connecting surface of the head piece, into which the capillary membranes that form the fiber bundle are poured at their one end, is star-shaped, whereby the connecting surface fills up the ring-shaped area between the gasification device and the concentrically arranged bores, and extends into the regions between the channels for liquid. According to the invention, a fiber bundle is provided that contains the capillary membranes in a very dense packing, whereby the untreated water is guided past the fiber bundle on the outside, and air is introduced within the fiber bundle. Preferably the fiber bundle is arranged vertically in the untreated water in all the embodiments, whereby the capillary membranes are fixed in place on the head piece at their lower ends, and their upper end can move in the stream of liquid. The air bubbles rise to the top essentially within the fiber bundle, and they are not entrained, or only entrained to a slight extent, by the liquid that flows past the fiber bundle on the outside.

[**0013**] In an embodiment of the membrane filter according to the invention with a filter chamber through which flow takes place, it is practical if the head piece is releasably connected with a pipe-shaped mantle, which forms the filter chamber. In another embodiment, it is provided, according to the invention, that the head piece can be connected with the pipe-shaped mantle of another, identically structured membrane filter, at the face that faces away from the fiber bundle, and that the permeate outlet is arranged on the circumference of the head piece. In the embodiment described, several membrane filters can be switched in series, one behind the other, as modular units. In this way, the filter area can be variably adapted to an application case. The permeate outlets on the circumference of the head pieces can be connected with one another by means of a collecting pipe.

[**0014**] According to another embodiment according to the invention, several bundles of fibers are connected with the head piece, whereby a gasification device as well as bores through which liquid flows, which concentrically surround the gasification device, are assigned to each fiber bundle. The head piece has separate distributor chambers for water and air, into which bores for water or air ducts, respectively, empty. Chambers that each contain a fiber bundle of capillary membranes and through which the untreated water flows in the lengthwise direction of the capillary membranes are connected with the head piece. This structure allows a parallel circuit of fiber bundles in a very compact arrangement.

[**0015**] In the following, the invention will be explained in greater detail, using a drawing that merely represents an exemplary embodiment. The schematic drawing shows:

[**0016**] **FIGS. 1 and 2** membrane filters for water treatment, according to the invention, which can be used in immersion operation, in lengthwise cross-section, in each instance,

[**0017**] FIGS. **3** to **5***a* membrane filter according to the invention, with a filter chamber through which liquid flows,

[**0018**] **FIGS. 6 and 7** other embodiments of the membrane filter according to the invention.

[**0019**] The fundamental structure of the membrane filters according to the invention as shown in the figures includes a head piece **1**, which has a permeate collecting chamber **2** with a permeate outlet **3**, and at least one fiber bundle **4** made up of capillary membranes **5**, which are sealed at one end and are poured into the head piece **1** at their other end, with an open end towards the permeate collecting chamber **2**. The capillary membranes **5** are preferably ultrafiltration membranes or microfiltration membranes, the diameter of which is less than 5 mm. Preferably, the capillary membranes possess a diameter between 0.5 and 3 mm. The capillary membranes **5** are surrounded by the untreated water **6** that is to be treated. Filtration takes place on the basis of a trans-membrane pressure difference, which can be generated by means of an excess pressure on the untreated water side and/or by a reduced pressure on the permeate side. The clarified liquid flows off towards the permeate collecting chamber **2** in the capillary membranes **5**.

[**0020**] The capillary membranes **5** of the fiber bundle **4** are attached, in a dense packing, to a connecting surface **7** of the head piece, which surface is not penetrated by flow channels for the untreated water. A gasification device **8**, from which air exits, is arranged within the fiber bundle **4**. The air feed preferably takes place intermittently, with the goal of cleaning off cover layers that have formed on the membrane surface during membrane filtration. In the embodiment shown in **FIG. 1**, the gasification device **8** has a protruding mouth piece **10** provided with at least one air outlet, which mouth piece extends essentially parallel to the capillary membranes **5** within the fiber bundle **4**, and is connected to an air duct **16** that is arranged in the head piece **1**. The mouth piece **10** has a pipe-shaped section with bores **11** on the circumference, but can also be structured as a ring gap nozzle, for example, from which the air exits with a radial alignment. The capillary membranes **5** poured into the head piece **1** at one end are freely movable at their other, sealed end, and perform more or less marked lateral movements under the effect of the turbulence that prevails in the untreated water and/or the flows that occur in the untreated water. To limit the lateral movements, a basket **12** is set onto the head piece **1**, which is formed from rods and rings in the exemplary embodiment. A pipe that can be provided with perforations can also be used as the basket **12**.

[**0021**] In the exemplary embodiment of **FIG. 2**, it is indicated that the head piece **1** can be structured as a block-shaped element. In the lengthwise direction of the head piece **1**, a plurality of gasification devices **8** is arranged, in order to introduce air into the fiber bundle **4**. The fiber bundle **4** consists of a dense packing of capillary membranes **5**. The head piece **1** is suitable for immersion operation and can have connecting devices, not shown, for attachment to a frame, which can be lowered into a basin containing untreated water. The permeate outlet **3** is provided at the

narrow face. In this regard, it becomes clear that a plurality of the head pieces **1** can be arranged parallel, next to one another.

[**0022**] In the embodiments shown in FIGS. **3** to **7**, the membrane filter has a filter chamber **14**, through which the untreated water to be treated flows. The in-flow to the filter chamber **14** takes place through bores **15** in the head piece **1**, which are arranged concentrically around the gasification device **8**. **FIG. 3** shows a top view onto a head piece **1** that has a centrally arranged duct **16** for the feed of air, and bores **15** that concentrically surround the air duct **16**, for the untreated water. The connecting surface **7** of the head piece **1**, into which the capillary membranes **5** that form the fiber bundle **4** are poured at their ends, is structured in star shape, whereby a ring area between the air duct **16** and the bores **15** that carry the liquid is filled out and the connecting surface extends into the regions between the channels **15** for liquid. It is also evident from **FIG. 3** that the capillary membranes **5** are arranged in a very dense packing. The untreated water is essentially guided past the outside of the fiber bundle and flows off in the lengthwise direction of the capillary membranes **5**. Furthermore, the fiber bundle **4** is gasified from the inside with air.

[**0023**] **FIG. 4** shows a lengthwise cross-section through the membrane filter in the section plane A-A; **FIG. 5** shows the lengthwise cross-section in the section plane B-B of **FIG. 3**. It is evident from the illustrations that the head piece **1** is releasably connected with a pipe-shaped mantle, which forms the filter chamber. The connection between the head piece **1** and the connection of the mantle **17** can be established by means of conventional quick-clamp connectors, not shown.

[**0024**] By means of a suitable structure of the head piece **1**, it is possible to arrange several membrane filters in series, one behind the other, as shown schematically in **FIG. 6**. The head piece **1** can be connected with the pipe-shaped mantle **17** of another identical membrane filter, at the face that faces away from the fiber bundle **4**. The permeate outlet **3** is arranged on the circumference of the head piece **1**. It is understood that the permeate outlets of the membrane filters can be connected to a common collecting line.

[**0025**] In the embodiment shown in **FIG. 7**, several fiber bundles **4** are connected with the head piece **1**, whereby each fiber bundle **4** has a gasification device **8** as well as bores **15** that concentrically surround the gasification device and have liquid flowing through them assigned to it. The head piece **1** has separate distribution chambers **18**, **19** for water and air, into which bores **15** for the untreated water or air ducts **16**, respectively, empty. Chambers that each form a filter chamber **14** and contain a fiber bundle **4** made up of capillary membranes **5**, and through which the untreated water flows in the lengthwise direction of the capillary membranes **5**, are connected with the head piece **1**.

1. Membrane filter for water treatment, comprising

a head piece (**1**) consisting of a permeate collecting chamber (**2**) with a permeate outlet (**3**),

at least one fiber bundle (**4**) made from capillary membranes, which are poured into the head piece (**1**) with an end that is open towards the permeate collecting chamber (**2**) and sealed on the opposite end thereof, and

a gasification device (**8**) with a mouth piece (**10**) that has at least one outlet (**11**) for air and extends essentially parallel to the capillary membranes (**5**), within the fiber bundle (**4**),

whereby the capillary membranes (**5**) of the fiber bundle (**4**) that are surrounded by the untreated water (**6**) to be treated are attached, in a dense packing, to a connecting surface (**7**) of the head piece (**1**), and clarified liquid can be withdrawn in the capillary membranes (**5**), to the permeate collecting chamber (**2**), characterized in that the head piece (**1**) contains an air duct (**16**) to which the mouth piece (**10**) that protrudes into the fiber bundle (**4**) is connected, and that the fiber bundle (**4**) terminates, at its other end, without being clamped in place, in freely movable manner in the untreated water (**6**).

2. Membrane filter according to claim 1, characterized in that for immersion operation, the connecting surface (**7**) is not penetrated by flow channels for the untreated water.

3. Membrane filter according to claim 1 or **2**, characterized in that a basket (**12**) is set onto the head piece (**1**), which limits the lateral movements of the fiber bundle (**14**) [sic].

4. Membrane filter according to claim 2 or **3**, characterized in that the head piece (**1**) has connecting devices for attachment to a frame, which can be lowered into a basin that contains the untreated water.

5. Membrane filter according to claim 1, characterized in that the head piece (**1**) has bores (**15**) that allow the untreated water to flow through, which are arranged concentrically around the gasification device (**8**), and that the capillary membranes (**5**) are poured into the head piece (**1**) on a ring-shaped connecting surface (**7**) between the gasification device (**8**) and the bores (**15**) that carry the liquid.

6. Membrane filter according to claim 5, characterized in that the connecting surface (**7**) of the head piece (**1**), into which the capillary membranes (**5**) that form the fiber bundle (**4**) are poured at their one end, is structured to be star-shaped, whereby the connecting surface (**7**) fills up the ring-shaped area between the gasification device (**8**) and the concentrically arranged bores (**15**), and extends into the regions between the channels for liquid.

7. Membrane filter according to claim 5 or **6**, characterized in that the head piece (**1**) is releasably connected with a pipe-shaped mantle (**17**), which forms the filter chamber (**14**) through which flow can take place in the lengthwise direction of the capillary membranes (**5**).

8. Membrane filter according to claim 7, characterized in that the head piece (**1**) can be connected with the pipe-shaped mantle (**17**) of another, identically structured membrane filter, at the face that faces away from the fiber bundle (**4**), and that the permeate outlet (**3**) is arranged on the circumference of the head piece (**1**).

9. Membrane filter according to one of claims 5 to 8, characterized in that several fiber bundles (**4**) are connected with the head piece (**1**), whereby a gasification device (**8**) as well as bores (**15**) through which liquid flows, which concentrically surround the gasification device (**8**), are assigned to each fiber bundle (**4**), and that the head piece (**1**) has separate distributor chambers (**18**, **19**) for water and air, into which the bores (**15**) for water or the air ducts (**16**),

respectively, empty; and that chambers that each contain a fiber bundle **(4)** of capillary membranes and through which the untreated water flows in the lengthwise direction of the capillary membranes **(5)** are releasably connected with the head piece **(1)**.

10. Membrane filter according to one of claims 1 to 9, characterized in that the mouth piece **(10)** has a pipe-shaped section with bores **(11)** on the circumference.

11. Membrane filter according to one of claims 1 to 9, characterized in that the mouth piece **(10)** is structured as a ring gap nozzle, from which the air exits radially.

12. Membrane filter according to one of claims 1 to 11, characterized in that the mouth piece **(10)** has a kick-back valve that closes if the pressure of the air feed drops.

* * * * *