US 20030172603A1

(19) United States

(12) Patent Application Publication

McKesson

(10) Pub. No.: US 2003/0172603 A1

(43) Pub. Date: Sep. 18, 2003

(54) FIRE COLLAR

(76) Inventor: William S. McKesson, Walled Lake, MI (US)

Correspondence Address:
BLISS MCGLYNN, P.C.
2075 WEST BIG BEAVER ROAD
SUITE 600
TROY, MI 48084 (US)

(21) Appl. No.: 10/320,961

(22) Filed: Dec. 17, 2002

Related U.S. Application Data

(60) Provisional application No. 60/344,099, filed on Dec. 19, 2001.

Publication Classification

(51) Int. Cl.[7] E04C 2/52; E04C 2/00

(52) U.S. Cl. 52/232; 52/220.8

(57) ABSTRACT

A fire collar is adapted to inhibit flame propagation through a partition and be supported to the partition and around a pipe extending through a hole in the partition. The fire collar includes a non-combustible sleeve having a pair of opposed, open ends. The fire collar further includes a layer of expandable material carried on the inner circumferential surface of the sleeve. The layer is adapted to be constrained by the sleeve to expand radially inwardly toward the pipe to collapse the pipe in the event the temperature of the material is raised above a predetermined temperature. The layer and the collapsed pipe together form a physical barrier across the sleeve to block the hole. The fire collar further includes a removable, elastic, interference member adapted to be disposed about the outer circumference of the pipe and between the inner circumferential surface of the sleeve and the pipe to create an interference fit therebetween to retain the sleeve relative to the pipe.

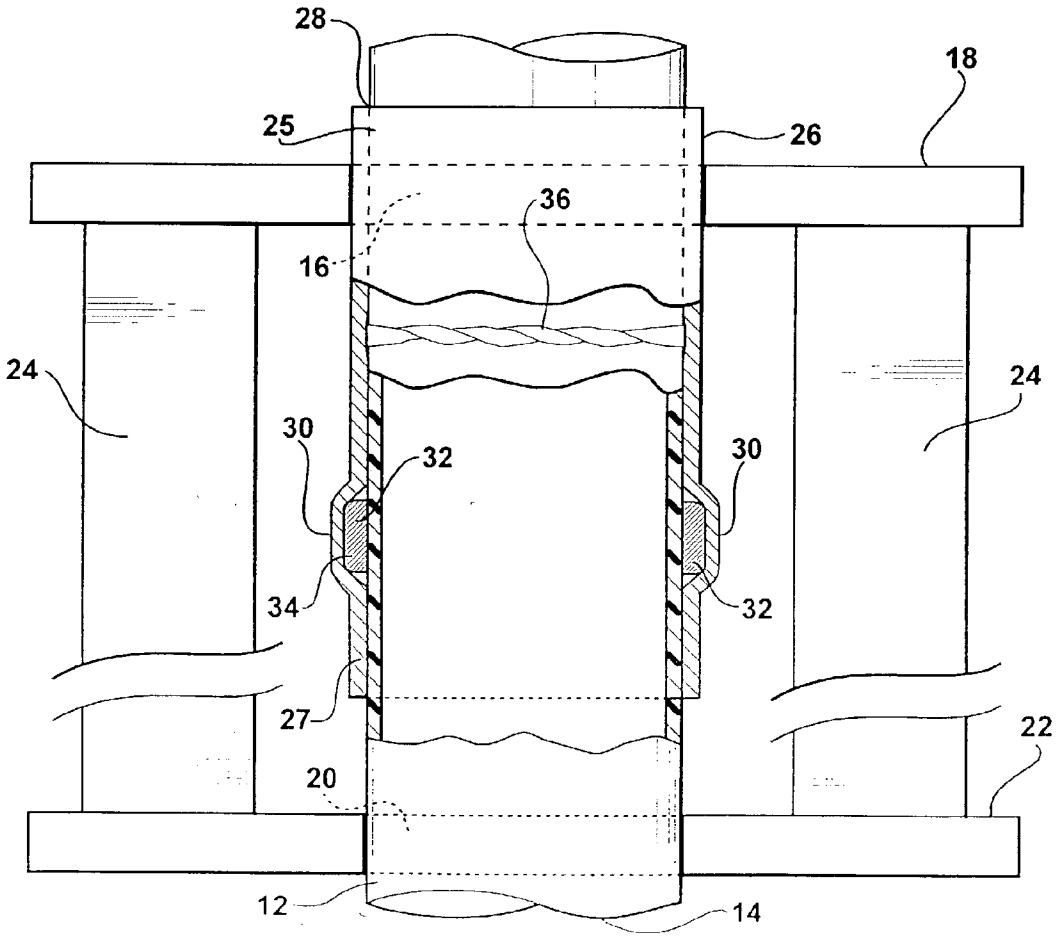

FIG - 1

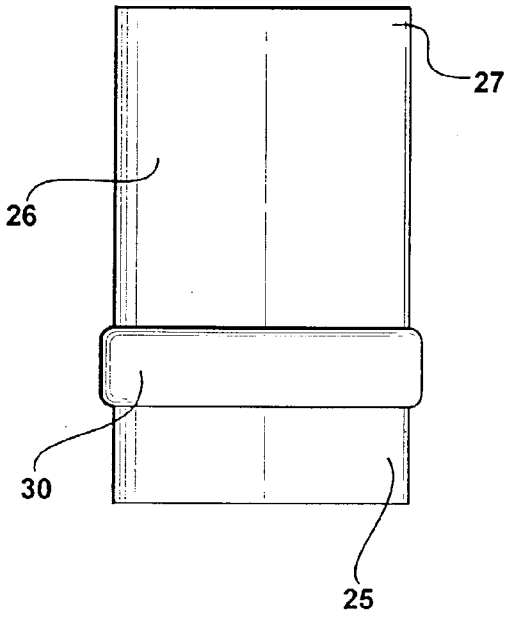

FIG - 2

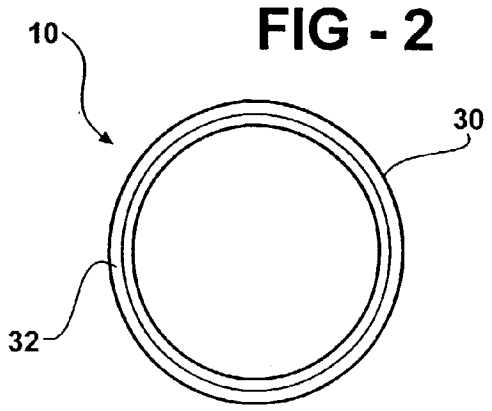

FIG - 3

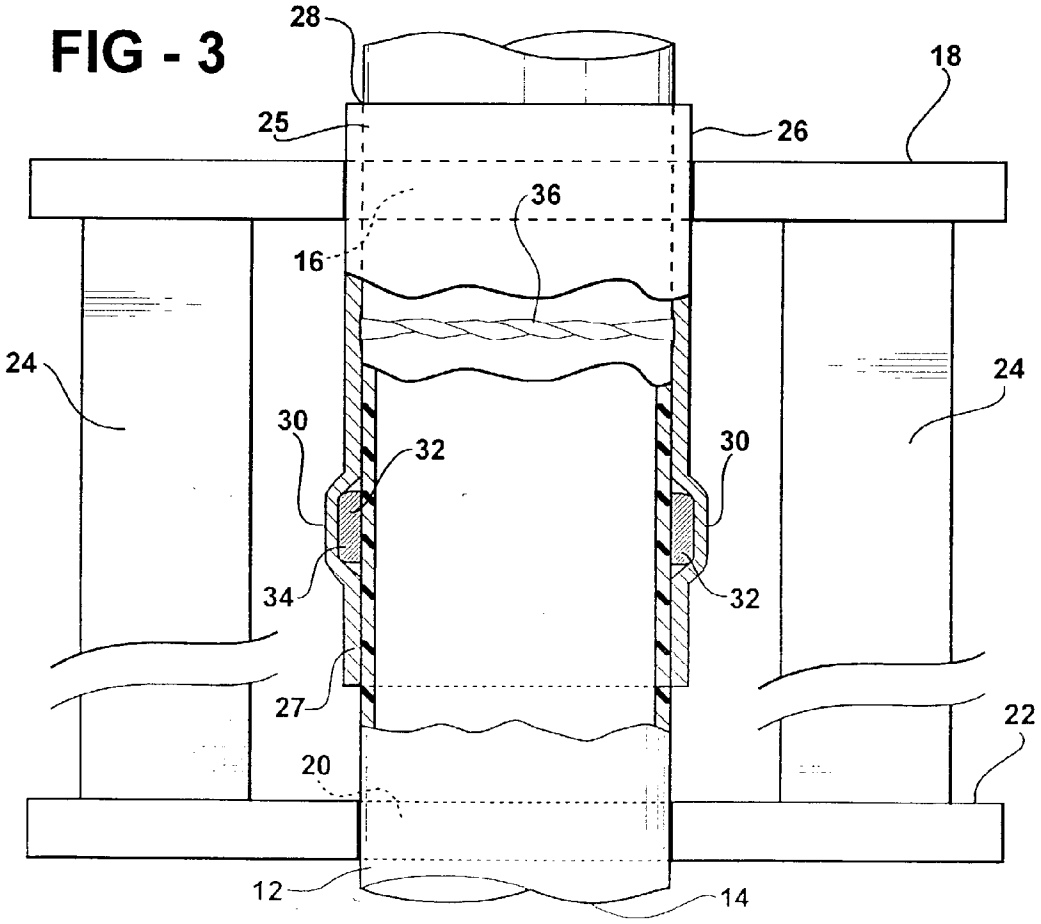

FIG - 4

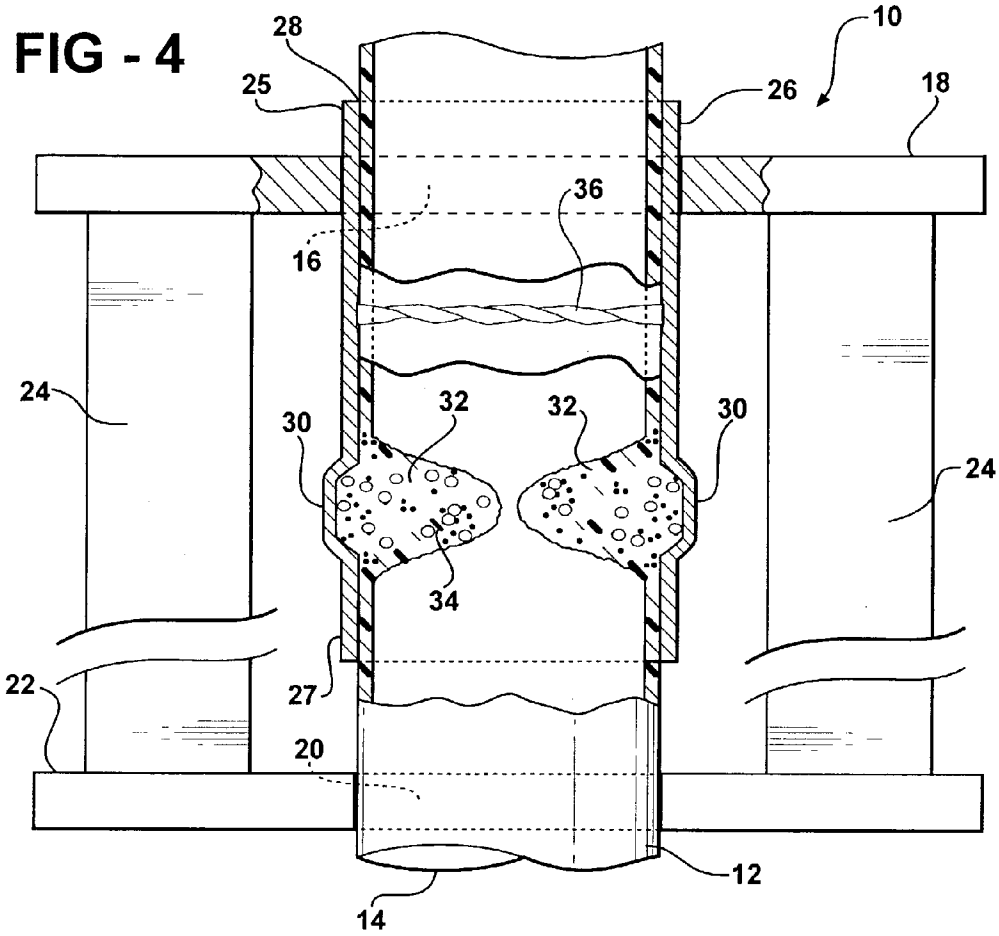
28
25
10
26
18
36
16
24
30
32
32
30
24
34
22
27
20
12
14

FIG - 5

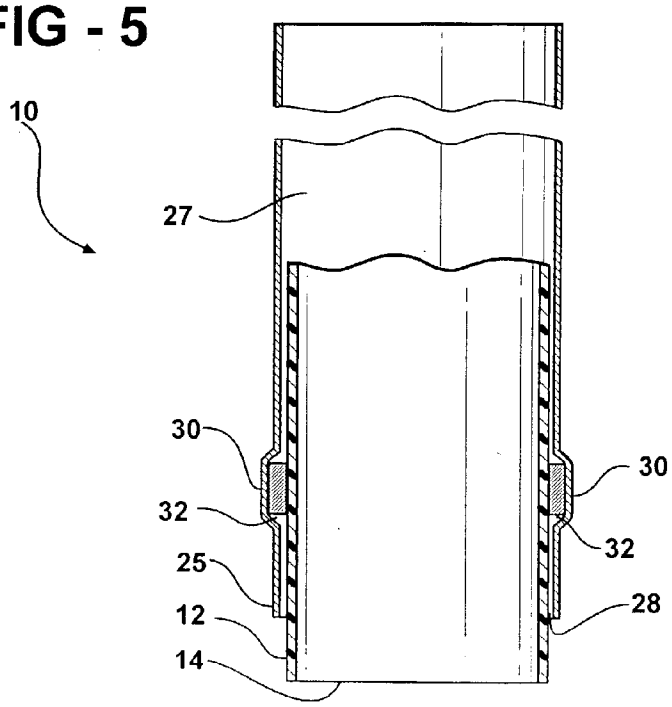
10
27
30
30
32
32
25
28
12
14

FIRE COLLAR

[0001] This application claims the benefit of U.S. Provisional Application No. 60/344,099, filed Dec. 19, 2001.

BACKGROUND OF THE INVENTION

[0002] 1. Field of the Invention

[0003] The present invention relates, generally, to a fire collar and, more particularly, to a fire collar that inhibits flame propagation through a partition.

[0004] 2. Description of the Related Art

[0005] Pipes are often used in a building for plumbing, heating, and cooling applications as well as to pass electrical, telephone, and computer lines therethrough. These pipes are generally plastic and often extend through holes in fire-rated partitions-such as walls, floors, or ceilings. Pipes of this type are conventionally made of ABS or PVC plastic material and adapted for connection with other plastic pipes by use of adhesives or the like.

[0006] ABS and PVC pipes are combustible. PVC pipes, although self-extinguishing, usually give off poisonous gases when subject to flame while ABS pipes are black and emit smoke upon being burned. In the event of a fire within the building, pipes of this type may burn and then melt and/or collapse. In that event, voids in or around the pipes may be created and act to transmit fire and/or its by-products, such as smoke and poisonous gases, through the partitions. Common sense and many building codes dictate that it is desirable for the partitions to contain the fire and its by-products from penetration through the partitions as long as possible.

[0007] For the above reasons, fire collars are often required in wooden, steel, and concrete structures alike to ensure that such voids are blocked in the event of a fire. This ensures that fire and its by-products are prevented, or at least inhibited, from passing from, for instance, one story of a structure to the immediate upper story.

[0008] Fire collars of the type known in the related art typically include a flexible metal strip that is designed to be manually wrapped around a pipe. The opposite ends of the metal strip are designed to substantially meet when wrapped around the pipe and can be held together by any suitable fastening means known in the related art. These devices are designed also to interface between two adjoining partitions and to be secured to one of the partitions using screws or other suitable fasteners. The fire collar supports an expandable material, such as a fire-rated wrap, about the inner circumference of the wrapped metal strip. Typically, the fire-rated wrap is co-extensively secured to the metal strip as a separate piece. In the event of a fire, the material expands radially inwardly and fills the void around the pipe, which extends through at least one of the partitions. The fire collar is typically designed to prevent the material from expanding axially.

[0009] To properly install a fire collar of the type commonly employed in the related art, a substantially round hole must be cut in the partition to a predetermined dimension. More specifically, for the fire collar to function properly, the hole must be cut so as to create, ideally, a one-eighth to one-quarter inch diametric tolerance between the fire collar and the partition. The tolerance is then caulked with a fire-rated caulk to secure the fire collar to the partition. Unfortunately, it is uncommon for such tolerances to be actively held in the field. This has been one basis cited for poor performance of the fire collars known in the related art. Poor performance or failure of these fire collars has led to insurance claims and litigation.

[0010] Fire collars of the type generally known in the related art also include a plurality of tabs that are formed on the metal strip. Each tab includes an aperture extending therethrough. The tabs are disposed radially outwardly from a longitudinal edge of the fire collar. A fastener is received through the aperture in each tab to mount the metal strip to surrounding building structure after the metal strip has been wrapped around the pipe. In particular, a screw, for instance, is inserted through the aperture in each of the plurality of tabs and fastened to the bottom side of the partition such that the tabs and the longitudinal edge of the fire collar are in abutting contact with the partition. This fastening scheme is designed to prevent the fire collar from unwrapping from the pipe due to the force of the expanding wrap in the collar in the event of a fire. However, this is not always accomplished in practical effect. A failure to follow the specifications for installing a particular fire collar may void any warranty relating to the fire collar and/or subject a contractor who is installing it to liability.

[0011] More specifically, although the diameter of the fire collar may be adjusted, the tabs are not always disposed about the fire collar such that it can be properly mounted in a secure manner to the partition. Screws, which are usually specified as the proper fastening mechanism, are often rejected in favor of nails. In fact, nails are frequently used in the field to fasten the fire collar to the partition when the tabs are not disposed about the fire collar such that screws can properly mount it in a secure manner to the partition. In operation, as the fire melts the pipe, heat from the fire causes the wrap to expand. The fire collar prevents the wrap from expanding outwardly so that the wrap expands only inwardly to collapse the pipe and fill the void. However, when the fire collars of the type known in the related art are not properly mounted, the fasteners fail and are pulled-out of the respective mounting surfaces, causing the fire collars to unwrap from around the pipes.

[0012] Generally speaking, fire rated wrap of the type conventionally employed in the related art typically has a two-hour fire rating. Ideally then, fire and its by-products should not penetrate the pipe, collar, and fire rated wrap for approximately two hours. However, caulk has a one-hour fire rating and is, therefore, the weakest link in the assembly. Thus, with conventional fire collars presently employed in the related art, the caulk determines the duration of time that the barrier is impenetrable by fire and its by-products. Various authorities, including those in the United States, also require that the barrier be capable of withstanding the force of water from a fire hose. Otherwise, attempts using a fire hose to put out a fire can, in fact, break open the barrier and encourage the spread of the fire and its by-products through the partition. Thus, it is important that fire collars are solidly mounted in place.

[0013] Other problems are presented during installation of the fire collars known in the related art. By way of example, nail plates are typically required by building and safety codes at strategic areas to protect a pipe from damage. Nail

plates protect adjacent pipes from damage by nails used by carpenters working around the pipe. Thus, fire collars of the related art require the additional time and expense during installation in order to avoid the nail plates used to protect vital structure found near the fire collars.

[0014] Another common problem often arises in connection with the installation of plastic pipes extending through holes in wooden partitions. More specifically, plastic pipes expand and contract. This expansion and contraction creates noise when plastic pipes make contact with wood. The fire collars of the related art do not prevent the occurrence of such noise.

[0015] Furthermore, the fire collars of the related art are typically installed by plumbing contractors, but only after a building has been plumbed. It is only after a building has been plumbed that the plumbing contractors must return to each pipe passing through a partition and wrap it with a fire collar. This greatly increases the cost in time and labor for such projects.

[0016] Thus, there remains a need in the art for a fire collar that may be easily and quickly installed at the time the building is being plumbed as well as a fire collar that requires fewer parts during installation. In addition, there remains a need in the art for a fire collar that can withstand the force of water from a fire hose in the event of a fire and eliminates the requirement for nail plates as protection for the pipe. Also, there is a need in the related art for a fire collar that prevents the creation of noise when a plastic pipe expands and contracts within a hole of a wooden partition.

SUMMARY OF THE INVENTION

[0017] The present invention overcomes the disadvantages in the related art in a fire collar that is adapted to inhibit flame propagation through a partition and be supported to the partition and around a pipe extending through a hole in the partition. The fire collar includes a non-combustible sleeve having a pair of opposed, open ends. The fire collar further includes a layer of expandable material carried on the inner circumferential surface of the sleeve. The layer is adapted to be constrained by the sleeve to expand in volume radially inwardly toward the pipe to collapse the pipe in the event the temperature of the material is raised above a predetermined temperature. The layer and the collapsed pipe together form a physical barrier across the sleeve to block the hole. The fire collar further includes a removable, elastic, interference member adapted to be disposed about the outer circumference of the pipe and between the inner circumferential surface of the sleeve and the pipe to create an interference fit therebetween to retain the sleeve relative to the pipe.

[0018] One advantage of the fire collar of the present invention is that its installation does not require the use of mechanical devices-such as tabs, screws, and nails-to mount the fire collar, thereby reducing cost, labor intensity, and time of installation. Similarly, the fire collar of the present invention eliminates the need for nail plates as protection for pipes at strategic areas in a building.

[0019] Another advantage of the fire collar of the present invention is that it does not require that a hole be cut in the partition to a specific dimension or within unrealistically close tolerances for installation of the fire collar.

[0020] Another advantage of the fire collar of the present invention is that it is easy to install, thereby eliminating or reducing the risk of voiding a warranty relating to the fire collar and, therefore, reduces the liability due to failure or poor performance by a plumber.

[0021] Another advantage of the fire collar of the present invention is that it eliminates the noise created when a plastic pipe expands and contracts within a hole of a wooden partition.

[0022] Another advantage of the fire collar of the present invention is that it can be installed at roughly the same time as the PVC or ABS pipe is installed, thereby eliminating the need to return after such installation to install the fire collar and, thereby, reducing the time required to install the fire collar.

[0023] Another advantage of the fire collar of the present invention is that it can be constructed having various lengths to accommodate pipes of various sizes and types.

[0024] Another advantage of the fire collar of the present invention is that it is noncombustible and preferably made of steel.

[0025] Another advantage of the fire collar of the present invention is that it cannot unwrap from a pipe and, therefore, better confines and reduces the amount required of the expanding material.

[0026] Still another advantage of the fire collar of the present invention is that less expanding material is necessary for the fire collar to function effectively, thereby reducing cost.

[0027] Other objects, features, and advantages of the present invention will be readily appreciated as the same becomes better understood after reading the subsequent description taken in conjunction with the accompanying drawings.

BRIEF DESCRIPTION OF THE DRAWINGS

[0028] **FIG. 1** is an elevational side view of a fire collar of the present invention;

[0029] **FIG. 2** is an elevational top or bottom view of a fire collar of the present invention;

[0030] **FIG. 3** is an environmental, partial, cross-sectional view of a fire collar of the present invention in its operative state mounted between a pipe and a partition;

[0031] **FIG. 4** is an environmental, partial, cross-sectional view of a fire collar of the present invention in the operative state shown in **FIG. 3**, but after the event of a fire;

[0032] **FIG. 5** is a cross-sectional side view of a fire collar of the present invention in its operative state mounted around a pipe.

[0033] **FIG. 6** is an enlarged, partial, cross-sectional view of the bead formed on the sleeve of the fire collar of the present invention.

DETAILED DESCRIPTION OF THE INVENTION

[0034] Referring now to the figures, where like numerals are used to designate like structure, a fire collar of the

present invention is generally indicated at **10**. The fire collar **10** is shown, per se, in **FIGS. 1 and 2** and in its operative mode in **FIGS. 3 through 5** supported around a PVC pipe **12**. The pipe **12** defines a void or passage **14**. In **FIGS. 3 and 4**, the pipe **12** extends substantially perpendicularly to and through a hole **16** defined by an upper partition **18**, such as a floor of an upper story of a building. Similarly, the pipe **12** also extends substantially perpendicularly to and through a hole **20** defined by a lower partition **22**, such as a ceiling of an immediate lower story of the building. As illustrated in the figures, the lower partition **22** is disposed in spaced, substantially parallel relationship with respect to the upper partition **18**. A joist **24** is disposed on opposite sides of the pipe **12** and extends between and substantially perpendicularly to the partitions **18**, **22**. As illustrated in these figures, the joists **24** extend substantially parallel to the pipe **12** and are adapted to support the partitions **18**, **22** in spaced relationship with respect to each other as is commonly known in the art.

[**0035**] In this respect, the fire collar **10** is described below and shown in the figures disposed around a single plastic pipe **12**. However, it will be apparent to those having ordinary skill in the art that it is possible to use the fire collar **10** with a plurality of interconnected pipes. Furthermore, the fire collar **10** may be used with pipes made of materials other than plastic. The fire collar **10** finds application when the pipes are made of a material that melts or, otherwise, collapses when subject to fire. In addition, the fire collar **10** may also be used with cable or another elongate member having a sheath around it made of a meltable material and that passes through a partition. Thus, from the description that follows, those having ordinary skill in the art will appreciate that the fire collar **10** is not limited to any particular type of pipe or conduit that extends between partitions in a building.

[**0036**] In the preferred embodiment of the fire collar **10** illustrated in **FIG. 1**, the fire collar **10** includes a hollow, continuous body of a substantially right-cylindrical shape, resembling a sleeve **26**. The sleeve **26** has a pair of opposed, open ends **25**,**27**. As shown in **FIGS. 3 and 4**, part of the sleeve **26** may extend completely through the upper partition **18** such that part of end **27** is disposed within the space defined between the upper partition **18** and the lower partition **22**. In operative mode, the sleeve **26** is disposed substantially concentrically around the pipe **12**, such that a small gap **28** is defined between the pipe **12** and the sleeve **26**. The gap **28** is of sufficient volume to allow the pipe **12** to expand and contract within the hole **16**. Also, the wall of the sleeve **26** has a thickness sufficient to protect the pipe **12** from damage from exterior the sleeve **26**. The pipe extends beyond ends **25**,**27** of the sleeve **26** in **FIGS. 3 and 4** and end **27** in **FIG. 5**. The sleeve **26** has a sufficient length such that the upper portion of the sleeve **26**, including end **27**, may serve as a nail plate providing protection to the pipe **12** through the upper partition **18**. Those having ordinary skill in the art will appreciate that the sleeve **26** can be constructed to have any suitable length, thickness, and inner diameter.

[**0037**] The sleeve **26** also has an annular groove or bead **30** that extends for a substantial portion of the general outer periphery of the sleeve **26**. In the preferred embodiment, the bead **30** extends completely about the entire outer periphery of the sleeve **26**. The bead **30** projects radially outwardly such that the bead **30** defines a pair of sides **31**,**33** and a space **32** therebetween, as best shown in **FIG. 6**. The sides **31**,**33** may be disposed at a predetermined angle a with respect to the sleeve **26**. For instance, as best shown in **FIG. 6**, this predetermined angle α may approximate 45°. However, those having ordinary skill in the art will appreciate that many angles over a relatively wide range may be employed without departing from the scope of the present invention.

[**0038**] The bead **30** is located longitudinally offset with respect to the axial length of the sleeve **26** and, therefore, closer to one of the ends **25**,**27** of the sleeve **26**. Preferably, the bead **30** is disposed proximate end **25** and distal end **27**. More preferably, the bead **30** is disposed approximately three-quarters of an inch from end **25**. Furthermore, in the preferred embodiment, the bead **30** is approximately one-quarter inch deep and one inch wide. However, those having ordinary skill in the art will appreciate also that the bead **30** can have any suitable shape, depth, width, and length and be disposed in any suitable relationship with the sleeve **26**.

[**0039**] Space **32** defined by the bead **30** is designed to be filled with an approved fire-rated material **34**. The material **34** may be of any suitable type that, when heated to a predetermined temperature, such as approximately 250° F., expands in volume by a factor of, for example, fifteen to twenty-five. Any suitable material may be used, and there are proprietary materials available, ranging from a graphite-based material to other materials, that are well known to those skilled in the related art. However, those having ordinary skill in the art will appreciate that the material **34** may extend over a portion or even the entire inner circumference of the sleeve **26** or any other suitable surface area and expand to any suitable volume at any suitable temperature.

[**0040**] Also, the material **34** may be disposed within the bead **30** in any number of ways. For instance, the material **34** may be formed as a composition strip one-quarter inch thick and one inch wide that is cemented or otherwise held in place to the inner circumference of the bead **30**. However, those having ordinary skill in the art will appreciate that the material **34** can have any suitable shape, thickness, width, and length and be fastened to the inner circumference of the bead **30** by any suitable means.

[**0041**] In the embodiment illustrated in FIGS. **3-4**, the sleeve **26** is fixed within the hole **16** to the upper partition **18** by a removable, elastic, interference member **36** adapted to be disposed about the outer circumference of the pipe **12** and between the inner circumferential surface of the sleeve **26** and the pipe **12** to create an interference fit therebetween to retain the sleeve **26** relative to the pipe **12**. The interference member **36** may be a washer, an O-ring, a rubber band, or any other suitable device that may be disposed between the sleeve **26** and the pipe **12**. Those having ordinary skill in the art will appreciate that this list of devices is for representative purposes only and not by way of limitation.

[**0042**] Thus, there is no need for a plumber to cut the hole **16** to a specific dimension for the fire collar **10** to work properly. Also, fixing the sleeve **26** to the pipe **12** does not require the use of mechanical fasteners, like screws and nails. And, the fire collar **10** can be installed at the same time the corresponding piping is installed. This feature greatly reduces the time and labor costs associated with installing the fire collar of the present invention.

[0043] **FIG. 4** illustrates the situation where the pipe **12** and the fire collar **10** have been subjected to a fire such that they have reached a temperature of approximately 250° F., for example. In this event, the material **34** expands inwardly, but is constrained from expanding radially outwardly by the unitary, concentric steel sleeve **26**. As the material **34** expands inwardly, the material **34** pushes the pipe **12** radially inwardly. As the pipe **12** melts, portions of the wall of the PVC or ABS pipe **12** are driven toward each other by the expanding material **34** and come together and become intimately mixed with the expanding material **34**. Thus, a physical barrier across the passage **14** defined by the pipe **12** is formed by the material **34** and melted plastic. As a result, the rising fire and its by-products are prevented from spreading and passing from the lower partition **22** to the upper partition **18** through and immediately around the pipe **12**. Also, the strength of the barrier is sufficient to withstand the force of the water from a fire hose.

[0044] There is no bleeding around the open ends **25**,**27** of the sleeve **26** by the material **34** in the event of expansion due to fire, as in the case of conventional fire collars. Thus, less material **34** is necessary for the fire collar **10** to function effectively. The fire rated material **34** is an expensive component of any fire collar. The efficient use of the fire rated material **34** in connection with the fire collar **10** of the present invention is another factor that may reduce costs relate to fire collars known in the related art.

[0045] As noted above, the sleeve **26** described and illustrated here is preferably made of steel. However, those having ordinary skill in the art will appreciate that the sleeve **26** may be made of any material that is non-combustible and capable of retaining rigidity and integrity in the event of a fire in the immediate surroundings of the sleeve **26**.

[0046] It would, of course, also be possible to provide the fire collar **10** with a sleeve **26** that is discontinuous and openable. In particular, it may be convenient or essential that the sleeve **26** be made in two substantially equal halves. Alternatively, the sleeve **26** may have a first, smaller portion that is connected to a second, larger portion.

[0047] In the preferred embodiment, the fire collar **10** is generally cylindrical, like the pipe **12** around which it is fitted. Of course, if it is desired to protect a partition having a pipe or other structure disposed therethrough that has a cross-section that is other than circular, the fire collar **10** may have a correspondingly non-circular cross-section.

[0048] Installation of the fire collar **10** is easier, less time-consuming, and, therefore, less expensive than installation of the fire collars presently known in the related art. Further, installation of the fire collar **10** requires fewer parts than installation of the fire collars of the related art requires. Also, the fire collar **10** prevents the creation of noise when a plastic pipe expands and contracts within a hole of a wooden partition. And, the fire collar **10** may be installed at the time the building is plumbed. In this way, the contractor who is installing the piping and securing the fire collar **10** is not required to return to the piping site to secure the fire collar **10** after installation has been completed.

[0049] The present invention has been described in an illustrative manner. It is to be understood that the terminology that has been used is intended to be in the nature of words of description rather than of limitation. Many modifications and variations of the present invention are possible in light of the above teachings. Therefore, within the scope of the appended claims, the invention may be practiced other than as specifically described.

What is claimed is:

1. A fire collar that is adapted to inhibit flame propagation through a partition and be supported around a pipe extending through a hole in the partition, said fire collar comprising:

a non-combustible, elongated sleeve having a pair of opposed, open ends; and

a layer of expandable material carried on the inner circumferential surface of said sleeve, said layer being adapted to be constrained by said sleeve to expand in volume radially inwardly toward the pipe to collapse the pipe in the event the temperature of the material is raised above a predetermined level, said layer and the collapsed pipe together forming a physical barrier across said sleeve to block the hole; and

a removable, elastic, interference member adapted to be disposed about the outer circumference of the pipe and between the inner circumferential surface of said sleeve and the pipe to create an interference fit therebetween to retain said sleeve relative to the pipe.

2. A fire collar as recited in claim 1, wherein said sleeve has an annular bead disposed completely about and projecting outwardly from the general outer periphery of said sleeve such that the sides of said bead are disposed at a predetermined angle with respect to said sleeve.

3. A fire collar as recited in claim 2, wherein said bead is disposed approximately one-quarter inch deep and one inch wide.

4. A fire collar as recited in claim 2, wherein the predetermined angle approximates 45°.

5. A fire collar as recited in claim 2, wherein said bead is located longitudinally offset with respect to the axial length of said sleeve and closer to one end of said sleeve.

6. A fire collar as recited in claim 5, wherein said bead is disposed proximate the lower end of said sleeve and distal the upper end of said sleeve.

7. A fire collar as recited in claim 6, wherein said bead is disposed approximately three-quarters of an inch from the lower end of said sleeve.

8. A fire collar as recited in claim 2, wherein said bead defines a space that is designed to be filled with said layer of expandable material.

9. A fire collar as recited in claim 2, wherein said layer of expandable material may be a composition strip one-quarter inch thick and one inch wide that is held in place to the inner circumference of said bead.

10. A fire collar as recited in claim 1, wherein said sleeve is of a substantially right-cylindrical shape.

11. A fire collar as recited in claim 1, wherein said sleeve is made of steel.

12. A fire collar as recited in claim 1, wherein said sleeve has a thickness sufficient to protect the pipe from damage from exterior said sleeve.

13. A fire collar as recited in claim 1, wherein said sleeve has a sufficient length such that the upper portion of said sleeve serves as a nail plate providing protection to the pipe through the partition.

14. A fire collar as recited in claim 1, wherein said interference member may be a member of a group consisting of a washer, an O-ring, and a rubber band.

15. A fire collar that is adapted to inhibit flame propagation through a partition and be supported around a pipe extending through a hole in the partition, said fire collar comprising:

a non-combustible, elongated, substantially right-cylindrical sleeve having a pair of opposed, open ends, said sleeve having a thickness sufficient to protect the pipe from damage from exterior said sleeve and having a sufficient length such that the upper portion of said sleeve serves as a nail plate providing protection to the pipe through the partition;

an annular bead disposed completely about and projecting outwardly from the general outer periphery of said sleeve such that the sides of said bead are disposed at a predetermined angle with respect to said sleeve and define a space therebetween, said bead disposed longitudinally offset with respect to the axial length of said sleeve and closer to one end of said sleeve;

a layer of expandable material carried in said space, said layer being adapted to be constrained by said sleeve to expand in volume radially inwardly toward the pipe to collapse the pipe in the event the temperature of the material is raised above a predetermined level, said layer and the collapsed pipe together forming a physical barrier across said sleeve to block the hole; and

a removable, elastic, interference member adapted to be disposed about the outer circumference of the pipe and between the inner circumferential surface of said sleeve and the pipe to create an interference fit therebetween to retain said sleeve relative to the pipe.

16. A fire collar as recited in claim 15, wherein said bead is disposed approximately one-quarter inch deep and one inch wide.

17. A fire collar as recited in claim 15, wherein the predetermined angle approximates 45°.

18. A fire collar as recited in claim 15, wherein said bead is disposed proximate the lower end of said sleeve and distal the upper end of said sleeve.

19. A fire collar as recited in claim 18, wherein said bead is disposed approximately three-quarters of an inch from the lower end of said sleeve.

20. A fire collar as recited in claim 15, wherein said layer of expandable material may be a composition strip one-quarter inch thick and one inch wide that is cemented in place within said space.

* * * * *