Dec. 25, 1934. L. P. HYNES 1,985,830

APPARATUS FOR TREATING FLUID MEDIUMS

Filed Oct. 1, 1929 2 Sheets-Sheet 1

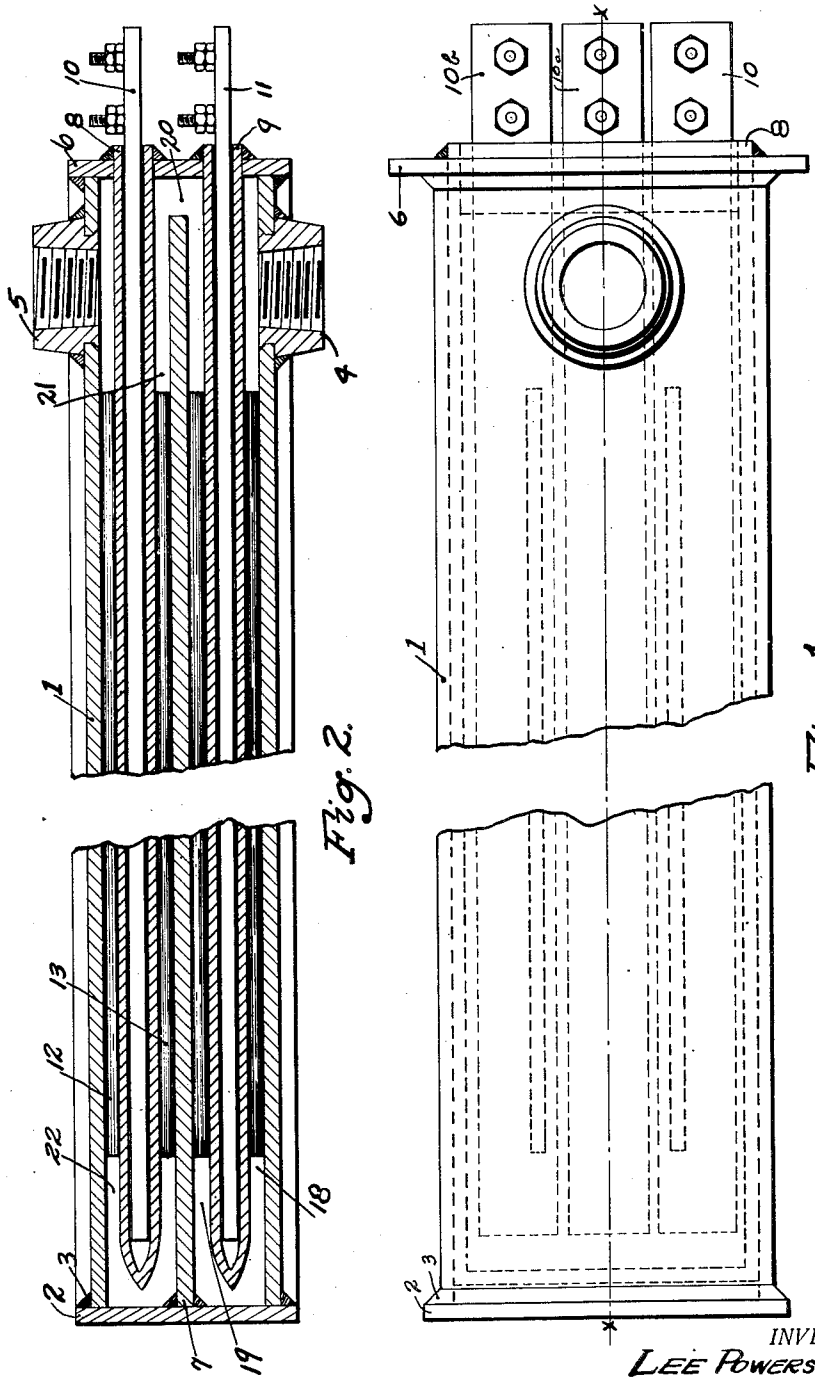

Fig. 2.

Fig. 1.

INVENTOR.
LEE POWERS HYNES.

BY
H. R. Van Deventer
ATTORNEYS.

Dec. 25, 1934. L. P. HYNES 1,985,830

APPARATUS FOR TREATING FLUID MEDIUMS

Filed Oct. 1, 1929 2 Sheets-Sheet 2

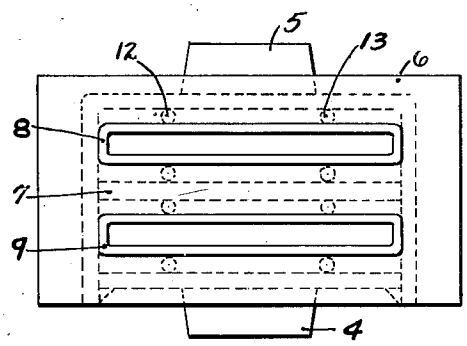

Fig. 3.

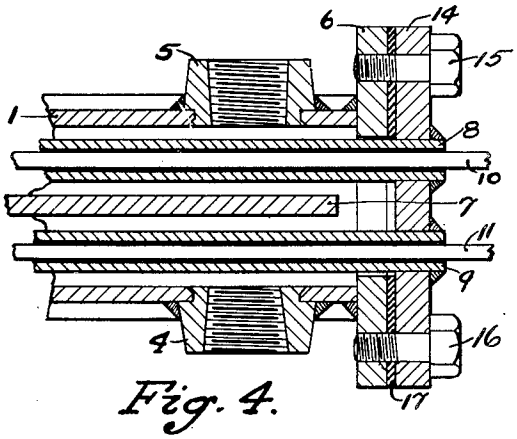

Fig. 4.

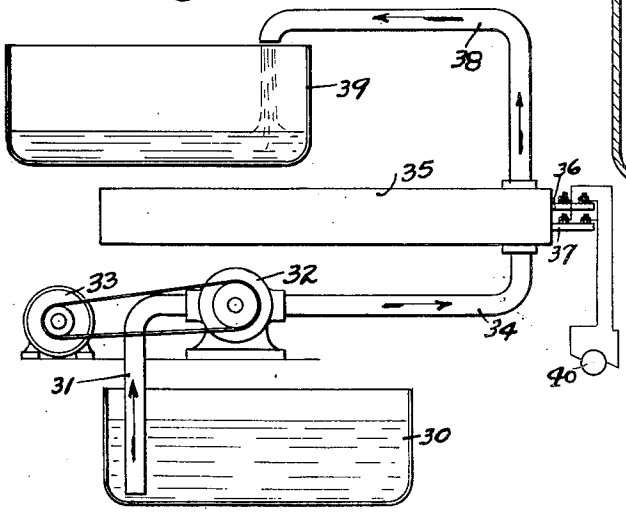

Fig. 6.

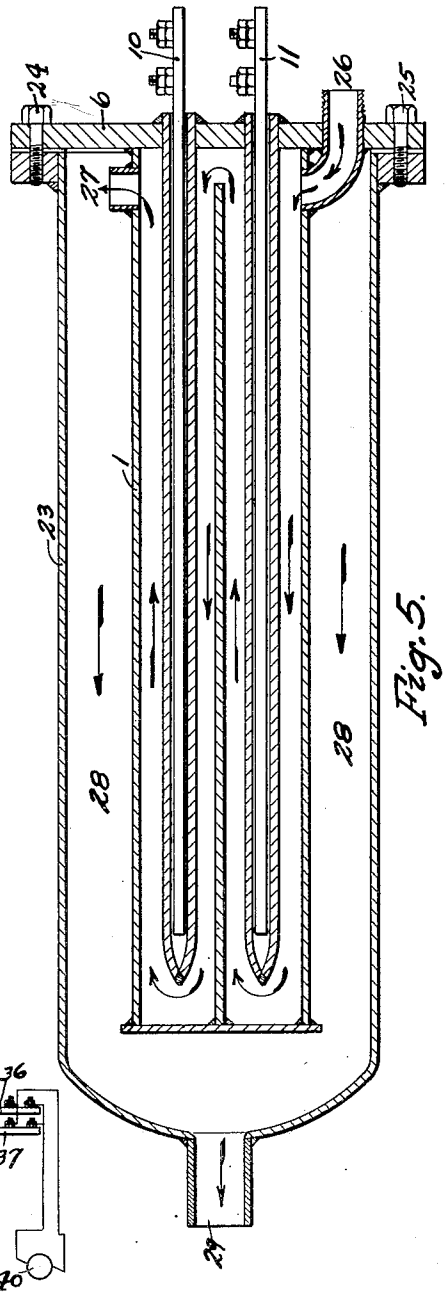

Fig. 5.

INVENTOR.
LEE POWERS HYNES
BY
H. R. Vandenventer
ATTORNEYS.

Patented Dec. 25, 1934 1,985,830

UNITED STATES PATENT OFFICE

1,985,830

APPARATUS FOR TREATING FLUID MEDIUMS

Lee Powers Hynes, Albany, N. Y.

Application October 1, 1929, Serial No. 396,590

37 Claims. (Cl. 219—39)

This invention is an apparatus for treating fluid media in either the liquid or the gaseous state.

Heretofore, fluids have been heated by introducing immersion heaters into a chamber confining the fluid. This is all that is normally required for heating pure water, for instance, but in heating other fluids, such as oils containing many chemicals and even some waters which tend to cause deposits, it has been found that the use of a much improved form of device is necessary. In this connection, it is well known that electrical heaters have a uniform input of energy, regardless of how the energy is taken away, and have a variable temperature according to the rapidity with which the heat is taken away or transferred. Therefore, care must be taken to avoid the formation of pockets which permit the flow of the fluid to become stagnant at different positions, because fluid which is trapped within said pockets will become overheated and in the case of oils produce carbonization. Likewise, many waters would under the same conditions deposit scale and other foreign substances.

One of the objects of the invention is to overcome the above mentioned objectionable conditions by providing means by which the fluid to be heated will be caused to flow in a definitely directed thin, more or less flat stream, over the entire area of the exposed heating surface. A further object is to avoid the formation of hot spots in the liquid to be heated, by providing means which will insure that the heater will function definitely in accord with a predetermined heating rate for which the heater may be designed. A further object is to provide passages through which the oil to be heated is caused to travel, said passages being designed to break up the stream at frequent intervals, and thereby counteract the unequal heating effects such as may be due to the natural tendency of viscous fluids to flow with much greater velocity in the center of the stream than along the surfaces containing it. A further object is to provide an apparatus in which the medium to be treated may be passed in a thin sheet over a series of plates and supplying a constant heat energy input to the surface of the plates.

A further object is to provide an efficient fluid tight casing adapted to withstand working pressures, if necessary, and a further object is to provide an apparatus from which the heater elements may be easily withdrawn and replaced without opening the chamber for the fluid medium.

By way of illustrating this method and apparatus, it will be described as applied to heating oil for use in electrical transformers and for other purposes. The reasons for subjecting such oil to heat treatment are already well known and are therefore not herein stated.

In the accompanying drawings:

Figure 1 is a horizontal view looking down on the top of a treating chamber embodying the invention;

Figure 2 is a sectional view on the line X—Y of Figure 1;

Figure 3 is a view looking at the electrode end of the treating chamber, Figure 1.

Figure 4 is a sectional view showing a modification of the terminal end of Figure 2;

Figure 5 is a sectional view of an alternate form of construction of the treating chamber, Figure 1, for use with high pressures, and

Figure 6 is a diagrammatic view of a complete system of oil treatment or the like illustrating the method of treating fluid mediums herein described and claimed.

Referring to the drawings, 1 is a treating chamber, the casing of which is preferably made of sheet metal to which is connected the head 2 in any suitable manner, such as by welding, the weld being indicated at 3. The inlet 4 and the outlet 5 together with the terminal head 6 are all suitably welded or otherwise secured to the casing and form therewith a closed chamber having also welded thereto or secured therein in any suitable manner one or more baffle plates 7.

Located within the chamber 1, and extending parallel with the baffle plates 7 are heater members 8 and 9, disposed alternately with respect to said baffle plates. Two heater members and one baffle plate are shown for the purpose of illustration, the heater members being supported at one end by the head 6, and the baffle plate being supported at one end by the head 2, but it is to be understood that the invention is not limited to any specific number of heater members or baffle plates, it being contemplated to position one baffle plate between each pair of adjacently positioned heater members. Each heater member consists of a thin metal sheath or pocket, closed at one end and open at the other, the open end being extended through the head 6, so that the closed end is adjacent to the end wall 2 of the casing 1 but spaced therefrom. It will also be noted that the closed end is more or less tapered, as shown. It will also be understood from Figure 3 of the drawings, that each heater member or sheath and each baffle plate is of the full width of the chamber 1 and engages the side walls of said chamber, so as to prevent lateral

overflow of the fluid and to confine its flow to a direction longitudinally of the casing, said baffle plate and chambers being separated by thin spaces of approximately rectangular cross section, extending the full width of the chamber. The sheaths or pockets 8 and 9 are shaped to removably receive suitable electric heating units 10 and 11 which may be of any suitable form, wire wound or otherwise that will supply heat directly to the walls of the sheaths or pockets 8, 9 whereby a constant heat energy input is supplied to the surface of these plates or tubes.

Interposed between the heater members 8 and 9, and the baffle plate 7 on the one hand, and between said heater members and the top and bottom walls respectively of chamber 1 are suitable spacers 12 and 13. These spacers are shown as consisting of rods of as small diameter as possible so as to minimize to the utmost any reduction of the exposed surface of the heater members 8 and 9. Said spacers serve as ties between the heater members and the baffle plates and between the heater members and the walls of the chamber, and also to resist compression and tension on the parts, thereby preventing distortion of said heater members so as to insure approximate uniformity of heating aera.

In order to permit of easily cleaning the interior of the treating chamber just described, the sheaths or pockets 8 and 9 may be attached to a removable head 14 which may be secured to the head 6 by means of a plurality of bolts, two of which are shown at 15, 16. (See Figure 4.) A suitable heat proof gasket may be placed at 17 to insure a leak proof joint.

By removing the bolts and the head 14, tubes 8 and 9 may be withdrawn from the chamber and the interior of the same cleaned in any suitable manner.

The oil to be treated entering the chamber at 4 flows first along the lower space 18 below tube 9 and then around the free end thereof into the space 19 and then around the end 20 of the baffle 7 into a space 21 formed by the lower side of tube 8 and around the free end of same into a space 22, finally leaving the chamber via outlet 5.

This tortuous path between the inlet and outlet of the chamber insures that the oil will pass in a thin sheet over a series of plates or tubes containing the heating elements which elements are supplying a constant heat energy input to the surface of these plates or tubes constituting the heating members.

And while the path is tortuous insofar as causing the oil to flow over large heated surfaces is concerned, the path of flow is entirely free from restrictions, small baffle plates, stagnant pockets and the like and the film of oil passes through the chamber progressively without any opportunity being afforded for one portion of the oil to receive more or less heat than another, thereby insuring a uniform treatment of the oil, the rate of flow and the amount of heat applied being easily regulated by well known means which need not be described here. In other words, the oil or other liquid is caused to travel rapidly over the heating surfaces in a thin stream, and at the free end of each heater member and baffle plate respectively, where the stream turns back, a certain amount of turbulence is created, which tends to mix all portions of the stream at that position, thereby preventing possible overheating of the parts of the fluid and insuring uniformity of heating. It will be noted in this connection that the heater elements are so arranged that but one side of the fluid stream comes in contact with a heated surface, during the travel of the stream, thereby minimizing tendency of overheating and burning, and the turbulence produced at the turns further minimizes such tendencies.

In Figure 5, the treating chamber 1 may be enclosed within an outer casing 23 capable of withstanding high pressures. In this case, the head 6 is extended sufficiently to provide space for the bolts 24, 25 by which it is secured to the casing 23.

It will now be observed that the oil entering the inner casing at 26 flows therethrough in the direction of the arrows through 27 and into the outer space 28 within chamber 23, finally leaving said chamber at 29.

The entire casing 1 and the oil therein is under the same pressure as exists in 28 and the body of oil surrounding this inner casing or chamber acts as a heat insulating medium during the treatment of the oil in the treating chamber 1.

Figure 6 is a diagrammatic drawing showing a complete apparatus for applying this method of treating fluid mediums. The fluid to be treated is drawn from tank 30 via pipe 31 to the pump 32 drawn by a suitable source of power, such as the electric motor 33. From the pump (which may be either a circulating pump or a compressor, depending upon the fluid to be handled) the fluid is carried via pipe 34 to the treating chamber 35 (constructed as herein described) where it is spread out into a relatively thin film and subjected to heat from the heater units 36, 37. The fluid after being heated to the desired temperature for the desired length of time, is discharged from the chamber via pipe 38 into the tank 39. Suitable temperature, pressure and volume controls may be applied to the system to produce the required results. Any suitable source of current, such as the dynamo indicated diagrammatically at 40, may be used to heat the elements 36, 37.

In order to point out the advantages of this method over the prior art, it is necessary to compare it with systems now in use. Such known systems usually employ a treating chamber consisting of an ordinary tank having therein a steam coil. Obviously the heat energy input to this coil is variable, the end of the coil where the live steam enters being at one temperature and the end where the steam leaves the coil being at another temperature. Therefore various portions of the fluid are subjected to various temperatures.

Where gas or other means of directly applying heat to a portion of the treating chamber are employed, the same condition often applies with the added objection that carbonization takes place in spots and there is danger of overheating the fluid at these spots.

Where electric immersion heaters have been used their shape and location in the treating chamber has not been such as to act uniformly on a thin film as with the instant method and usually these heaters act directly upon the fluid medium and not through plates or tubes having a constant heat energy input to the surface thereof, as herein described. For instance, the shape of the passage is also of importance in securing the greatest possible area of heating surface for a given velocity of flow through a passage. Hence, thin flat rectangular areas are far superior to cylindrical or any other shape as they have the maximum area of contacting surface. Oil tends

to form a film along the surfaces of the passages containing it, and the velocity of its travel over a surface is the major factor in governing the thickness of this film. That is, the greater the velocity, the thinner the film, and as oil is a poor conductor of heat, the thinner the film the better heat transfer for a given temperature gradient between the heating surface and the fluid stream. Proper velocity and pressure of contacting with the heating surface, sweeps away any particles of fluid tending to lodge or cling on the surface, thus keeping them clean and in the most efficient condition. This is very important with electric heaters because if any deposit forms on the surface, the rate of heat transfer is retarded and the temperature of the heater rises. With oil and many other liquids, its temperature affects its viscosity, and the more viscous it is the greater thickness and more sluggish is the condition of its film surface. Thus, an electric heater is naturally suitable to this service because as the flow progresses through the heater, the heater temperature tends to increase because of hotter oil in contact with it. But on the other hand, the film thickness decreases and better mixing and flowing occur, which makes the oil or liquid more efficient to pick up the heat.

Stored heat is of importance because, if for any reason, the fluid flow is temporarily stopped and the heat cut off, the stored heat, if great mass is present, will cause destructive heating of the stagnant fluid around the heaters. One of the advantages of the thin tube design and large heating surface of the present invention is that this condition is avoided.

To further point out the advantage of this method, reference is had to Figure 2. Consider the tubes 8, 9 to be replaced by a steam pipe entering the chamber through 6, continuing nearly to the head 2 and returning, passing out through 6 thereby forming a heating loop or coil. If the steam entered this pipe at 8 and left at 9, there would be a progressive and more or less uniform drop in temperature between the entering and exit end of the coil. This temperature gradient would cause the fluid in the chamber to be heated to a degree dependent upon what portion of the steam coil it contacted with. No proper regulation could be effected for there is no constant heat energy input from the steam to the wall of its confining pipe, as the energy is extracted from the steam as it progresses through the pipe and a temperature gradient exists along the pipe from one end to the other.

By the means herein disclosed this difficulty is overcome and a uniform temperature gradient secured all over the entire area or surface of the heater plates or tubes. This is secured by the proper proportioning and distribution of the electric heating elements. Even the mutual relationship of these elements and their mutual heating effect can be controlled. These may be arranged in groups, or side-by-side as shown at 10, 10*a*, 10*b* in order to produce any desired effect and an even distribution of heat energy to the adjacent walls of the tubes 8, 9, constituting the heating surfaces within the treating chamber.

It is obvious that the heater tubes may be made into both heads so that they extend into the chamber from both ends. In cases like this the baffle plates may be omitted, as each heater tube from one end may act as a baffle plate for each other heater tube.

With a constant energy input per unit of heating surface and with a definite fixed velocity of the material being treated there is no possibility of overheating in spots and carbonizing or otherwise injuring the treated material, and the material is delivered at a uniform temperature. It has been impossible to get these results with previously known methods or apparatus.

The process of treating a fluid medium is herein described merely by way of illustration. This method is equally applicable to steam and gases whether compressed or not. The modifications necessary when handling gaseous mediums instead of liquids are obvious.

I claim:

1. An apparatus for heating fluids comprising a closed chamber having an inlet and an outlet, flat surfaced heater members located within said chamber, means cooperating with said heater members to divide the chamber into an unrestricted continuous channel connecting said inlet and said outlet, said channel being formed with a plurality of convolutions of uniform cross section, which cross section is very wide as compared to its depth, so that the fluid is caused to flow in a thin sheet-like stream through said channel, said heater members being so constructed and arranged with respect to said channel that they respectively present but one heated surface to the fluid stream as it travels through each convolution, whereby the tendency to overheat and burn the fluid is minimized.

2. An apparatus for heating fluids comprising a closed chamber having an inlet and an outlet, means within said chamber providing flat heating surfaces contiguous to a thin wide tortuous channel, said channel being formed of a plurality of superposed branches extending longitudinally of said chamber, each branch having means connecting it at one end with an adjacent branch, the connecting means of the respective branches being arranged in staggered relation, means for causing fluid to flow through said channel so that a thin sheet-like stream of fluid is caused to travel in contact with said heating surfaces, and means for providing a constant heat energy input to approximately the entire area of said heating surfaces.

3. An apparatus for heating fluids comprising a closed chamber having an inlet and an outlet, means within said chamber providing a thin wide convolute channel of rectangular cross section having convolutions extending alternately from one end of the casing to the other, said channel communicating with said inlet and said outlet, heating means positioned to contact with but one side of said fluid stream during its travel through each convolution, and means for providing a constant heat energy input to approximately the entire area of the heating surfaces.

4. An apparatus for heating fluids comprising a closed chamber having an inlet and an outlet, relatively spaced heating members each supported at one end and extended longitudinally into said chamber, baffle plates each also supported at one end and extended into said chamber parallel with said heater members but in the opposite direction, there being one baffle plate between each pair of adjacent heating members, the unsupported ends of the heater members and baffle plates being spaced from the adjacent end walls of said chamber, said heating members and said baffle plates being the full internal width of the said chamber, so that a relatively wide and thin heating passage is provided between said inlet and said outlet, and means for supplying heat energy to said heater members.

5. An apparatus for heating fluids comprising a closed chamber having an inlet and an outlet, relatively space sheath-like heater members having open ends, means supporting the open ends of said heater members with said members extended longitudinally into the chamber, baffle plates each also supported at one end and extended longitudinally into said chamber parallel with the heater members but in the opposite direction, there being one baffle plate between each pair of adjacent heating members, the unsupported ends of the heater members and the baffle plates being spaced from the adjacent end walls of said chamber, said heating members and said baffle plates being the full internal width of said chamber, so that a relatively wide and thin heating passage is provided between said inlet and said outlet, and heater units removably positioned within said heater members.

6. An apparatus for heating fluids comprising a closed chamber having an inlet and an outlet, a removable head forming one end wall of said chamber, relatively spaced heating members, each supported at one end by said end wall and extended longitudinally into said chamber with their other ends spaced from the other end wall of said chamber, baffle plates each also supported at one end by the last mentioned end wall of the chamber and extending longitudinally into the chamber parallel with said heater elements with their free ends spaced from said head, there being one baffle plate between each pair of adjacent heater members, said baffle plates and said heater members being the full internal width of the said chamber so that a relatively wide and thin heating passage is provided between said inlet and said outlet, and means for supplying heat energy to said heater members.

7. An apparatus for heating fluids comprising a closed chamber having an inlet and an outlet, heating members disposed longitudinally within said chamber and supported at one end by one end wall of said chamber so that the other ends are spaced from the other end wall of the chamber, baffles supported at one end by the last mentioned end wall and extending longitudinally of said chamber parallel with the heater members with its other end spaced from the first mentioned end wall, spacer means interposed between the baffles and the heater members to maintain them in alignment, and means for supplying the heat members with heat energy.

8. An apparatus for heating fluids comprising a closed chamber having an inlet and an outlet, heating members disposed longitudinally within said chamber and supported at one end by one end wall of said chamber so that the other ends are spaced from the other end wall of the chamber, baffles supported at one end by the last mentioned end wall and extending longitudinally of said chamber parallel with the heater members with its other end spaced from the first mentioned end wall, spaced apart rods interposed between the baffles and the heater members to maintain them in alignment, said rods extending longitudinally of the chamber and parallel with the heater members and baffle plates, and means for providing a constant heat energy input to the heater members.

9. An apparatus for heating fluids comprising a closed chamber having an inlet and an outlet, relatively spaced sheath-like heater members, said members each being open at one end and closed at the other end, said closed end being tapered, means supporting said heater members at their open ends so as to extend longitudinally into said chamber with their closed ends spaced from the adjacent end wall, baffle plates alternating with said heater members, said plates being supported by the last mentioned end wall and extending longitudinally into the chamber parallel with said heater members, each with its free end spaced from the adjacent end wall, there being one baffle plate between each pair of adjacent heating members, and removable heater elements located within said heater members.

10. An apparatus for heating fluids comprising a closed chamber having an inlet and an outlet, a head forming one end of said chamber, relatively spaced heater members each supported at one end by said head and extended longitudinally into the chamber, baffle plates supported by the other end wall of said chamber, and extending longitudinally into the chamber parallel with the heater members but in the opposite direction, means for introducing heat energy into said heater members, so that their free ends overlap the free ends of the heater members, a pressure casing enclosing said chamber, and means connecting said pressure casing with said head so that said head forms a closure for one end of said casing.

11. An apparatus for heating fluids comprising a closed chamber having an inlet and an outlet, a baffle plate connected to one end of the chamber and to the sides thereof, said baffle plate extending toward the other end of the chamber so as to divide said chamber into separate compartments communicating with each other through a passage formed by the free end of said baffle plate and the adjacent end of the chamber, heating members longitudinally disposed within said chamber and positioned on each side of said baffle plate, each heating member consisting of a flattened tube passing through an end wall of the casing, said flattened tubes also engaging the sides of the chamber, and means for supplying a constant heat energy input to the surfaces of said heater members.

12. An apparatus for heating fluids comprising a casing open at one end, a head removably secured to the open end of the said tank to provide a closed chamber, means providing an inlet and an outlet for said chamber, a plurality of tubular heater casings of rectangular cross section secured at one end to said head and projecting longitudinally into the tank, their free ends being sealed, and their outer ends being open to the atmosphere, means cooperating with said tubular casings to provide a thin flat passage for a stream of fluid flowing from the inlet to the outlet, said casings being so constructed and arranged with respect to said passage that they respectively present but one heated surface to the fluid stream at any given position during its travel, electric heater elements removably mounted in the respective tubular casings.

13. An electric heater comprising a chamber, and one or more heating members projected into said chamber from an end thereof and also extended laterally into engagement with the side walls of the chamber, said heating members and said chamber being so constructed and arranged as to provide staggered channels of approximately uniform cross section, each heating member having a free extremity spaced from the adjacent chamber wall in such manner as to provide terminal communications between the channels.

14. An electric heater comprising a chamber, means providing a series of flat longitudinally

disposed staggered channels of approximately uniform cross section, said means including one or more heating members projected into the chamber from an end thereof and also extended laterally into engagement with the side walls of the chamber and so constructed and arranged as to provide staggered channels, each heating member having a free extremity spaced from the adjacent chamber wall in such manner as to provide terminal communications between the channels, and flat heater elements located within said heater members.

15. An electric heater comprising a chamber, means providing a series of flat longitudinally disposed staggered channels of approximately uniform cross section, said means including one or more heating members projected into the chamber from an end thereof and also extended laterally into engagement with the side walls of the chamber and so constructed and arranged as to provide staggered channels, each heating member having a free extremity spaced from the adjacent chamber wall in such manner as to provide terminal communications between the channels, said free extremities being sealed and tapered, and heater elements removably mounted within said heater members.

16. An electric heater comprising a chamber, alternately arranged heaters and baffle members providing a series of flat, longitudinally disposed, staggered channels of approximately uniform cross section, each heater member being projected into said chamber from an end wall thereof and forming a wall of the channel, each baffle plate being projected into the chamber from an opposite end wall thereof, said heating members and baffles being of sufficient width to laterally engage the side walls of the chamber, each heating member having a free end spaced from the adjacent chamber end wall and each baffle member having a free end spaced from the other end wall.

17. An electric heater comprising a chamber, means providing a series of flat longitudinally disposed staggered channels of approximately uniform cross section, said means including one or more heating members projected into the chamber from an end thereof and also extended laterally into engagement with the side walls of the chamber and so constructed and arranged as to provide staggered channels, each heating member having a free extremity spaced from the adjacent chamber wall in such manner as to provide terminal communications between the channels, and means for propelling liquid through said channels at an approximately uniform rate of speed.

18. An electric heater comprising a chamber, means providing a series of flat longitudinally disposed staggered channels of approximately uniform cross section, said means including one or more heating members projected into the chamber from an end thereof and also extended laterally into engagement with the side walls of the chamber and so constructed and arranged as to provide staggered channels, each heating member having a free extremity spaced from the adjacent chamber wall in such manner as to provide terminal communications between the channels, electric heaters of relatively low heat storage capacity within said heating members, and means for so supporting said heating members that liquid flowing through said channels will successively contact with both sides of the partitions.

19. An electric heater comprising a closed chamber, partitions dividing said chamber into a series of thin, flat compartments of small cross sectional area and of large wall surface, said partitions being of hollow rectangular cross section arranged so that the fluid to be heated will flow serially from one compartment to another around both sides of each partition, and electric heaters of relatively low heat-storage capacity located within said partitions.

20. A heater for oil or other fluid comprising a chamber having an inlet and an outlet, a flat hollow member projected into said chamber and so supported as to provide parallel ducts serially communicating with each other at one end, said hollow member constituting a common wall for each duct having exposed surfaces in the respective ducts, a flat electric heater located within said hollow member and so positioned as to uniformly heat the respective exposed areas thereof, and means for causing fluid to travel through said duct at a definite and uniform speed.

21. An apparatus for heating fluids comprising a chamber of rectangular cross section having an inlet and an outlet, cross partitions located within said chamber and engaging the side walls thereof so as to provide a relatively shallow, flat-walled passageway, means for supplying a predetermined quantity of heat energy to wall surfaces of said passageway, and means constructed and arranged to positively maintain a predetermined rate of fluid flow through said passageway.

22. An apparatus for heating fluids comprising a chamber of rectangular cross section having an inlet and an outlet, cross partitions located within said chamber and so arranged as to close the space between the side walls thereof, said partitions being shorter than the length of the chamber and attached alternately to the opposite end walls of the chamber so as to form a relatively shallow, flat-walled tortuous passage for fluid from the inlet to the outlet, and means for electrically heating one or more of said partitions so that a part of the travel of the fluid is over heated surfaces.

23. An apparatus for heating fluids comprising a chamber of rectangular cross section having an inlet and an outlet, cross partitions located within said chamber and so arranged as to close the space between the side walls thereof, said partitions being shorter than the length of the chamber and so positioned and arranged within the chamber as to provide a continuous shallow tortuous passageway for liquid flow from the inlet to the outlet, and means for electrically heating one or more surfaces forming part of said passageway walls, so as to impart heat to the fluid flowing in contact with said surfaces.

24. An apparatus for heating fluids comprising a fluid heating chamber having an inlet and an outlet, means providing a tortuous passageway from the inlet to the outlet constructed and arranged to cause the fluid to flow in the form of a relatively shallow flat stream, said means consisting of flat staggered partitions shorter than the length of the chamber and each supported by an end wall thereof, said partitions extending the full width of the chamber and engaging the side walls thereof, one or more of said partitions being constructed of flat tube-like form having one end extended through and sealed to its supporting wall, and flat electric heating elements removably inserted therein and having terminal connections externally of the tubes.

25. A sealed electric fluid heater comprising a rectangular enclosure, a hollow flat parallel flow-directing partition extending transversely from side to side within said enclosure and having one end extended through and sealed to an end wall of the enclosure, the other end of said partition being closed and spaced from the opposite end wall of said enclosure, so as to permit free passage of fluid along one side of the partition, around the end thereof and back along its other side in a reverse direction of flow, said partition having an open end constructed and arranged to admit a slide-in heating element to the interior thereof.

26. A sealed electric fluid heater comprising a rectangular enclosure having a removable end wall, a hollow flat parallel flow-directing partition having one end supported by said removable end wall, said partition being of a width to extend transversely from side to side within said enclosure, the other end of said partition being closed and spaced from the opposite end wall of the enclosure and so constructed and arranged as to permit free passage of fluid along one side of the partition around the end thereof and back along its other side in a reverse direction of flow, the supported end of said partition being open to admit a slide-in heating element to the interior thereof.

27. An apparatus for heating fluids comprising a chamber having an inlet and an outlet, a series of flat parallel flow-directing partitions each secured at one end to an end wall and free at its other end, said partitions being arranged in staggered relation and extended from side to side of the chamber so as to provide a relatively shallow tortuous passage for the flow of fluid between the partitions and around the ends thereof from the inlet to the outlet, said partitions including one or more hollow flat heater casings each open at its supported end to admit slide-in electrical heating elements, but closed at its free end.

28. An apparatus for heating fluids comprising a chamber of substantially rectangular cross section having an inlet and an outlet, a series of flat parallel flow-directing partitions each having one end engaged with an end wall of the chamber and its other end free, said partitions being arranged in longitudinally parallel but staggered relation and extended from side to side of the chamber so as to provide a relatively shallow tortuous passage for the flow of fluid between the partitions and around the ends thereof from the inlet to the outlet, and of the full width of the chamber, said partitions including one or more hollow flat heater pockets each having an open end extended through the end wall with which it is engaged, its free end being closed, and a flat heater element located within each pocket and removable through the open end thereof.

29. In an electric heater, means providing a chamber having an inlet opening and an outlet opening, one of the walls of said chamber having a removable portion, and means providing a relatively wide shallow fluid passage leading from the inlet to the outlet, said last mentioned means including flat heater members connected to and removable with said removable wall portion.

30. In an electric heater, means providing a chamber having an inlet opening and an outlet opening, means providing a relatively wide shallow fluid passage leading from the inlet to the outlet, said last mentioned means including flat heater members, and means for removably supporting said heater members within said chamber.

31. In an electric heater, means providing a chamber having an inlet opening and an outlet opening, one of the walls of said chamber having a removable portion, and means providing a relatively wide shallow fluid passage leading from the inlet to the outlet, said last mentioned means including flat heater members supported at their ends by said removable wall portion and removable therewith.

32. In an electric heater, a casing having an outlet opening, an internal heating chamber within said casing having a fluid outlet opening communicating with the casing, said heating chamber having flat parallel side walls, transversely disposed partition members engaging said side walls, said partition members and said side walls being constructed and arranged to form a shallow relatively wide tortuous passage through the chamber to said discharge opening, means for electrically heating one or more of the surfaces of said partitions, and means for introducing fluid into said passage.

33. In an electric heater, a fluid container having an outlet opening, a heating chamber located within said casing and having a discharge opening communicating with the casing, means within the chamber providing a shallow relatively wide tortuous passage communicating with said discharge opening and constructed and arranged to insure travel of liquid over a prescribed route, means for electrically heating the fluid during such travel, and means for introducing fluid into said passage.

34. In an electric heater, a fluid container having a wall removably closing one end thereof, said container also having an outlet, and an internal heating chamber, said heating chamber having means providing a tortuous passageway constructed and arranged to cause liquid to flow therethrough in the form of a relatively shallow flat stream, said means including flat staggered partitions extending between and engaging the side walls of said heating chamber and the said removable wall.

35. An electric fluid heater comprising a sealed fluid chamber provided with flat transversely disposed flow directing partitions engaging the side walls of the chamber, each partition having one end engaging an end wall of the chamber, the other end being free, said partitions being arranged in staggered relation and so constructed and arranged as to provide a continuous tortuous passageway for the flow of fluid between the partitions and around the ends thereof, and removable means for heating the fluid by conduction through the walls of the passage, said heating means being so constructed and arranged as to be removable without impairing the continuity of said passage.

36. In an electric heater, a fluid container having a wall removably closing one end thereof, said container also having an outlet, and also an internal heating chamber, said heating chamber having means providing a tortuous passage way constructed and arranged to cause liquid to flow therethrough in the form of a relatively shallow flat stream, said means including flat staggered partitions extending between and engaging the sides of the heating chamber and the said removable wall, and means for maintaining said partitions in definitely spaced relation with respect to each other.

37. An apparatus for heating fluids comprising a chamber of rectangular cross section having an inlet and an outlet, cross partitions located

within said chamber and so arranged as to close the space between the side walls thereof, said partitions being shorter than the length of the chamber and attached alternately to the opposite end walls of the chamber so as to form a relatively shallow, flat-walled tortuous passage for fluid from the inlet to the outlet, means for maintaining said partitions in definitely spaced relation with respect to each other, and means for electrically heating one or more of said partitions so that a part of the travel of the fluid is over heated surfaces.

LEE POWERS HYNES.