July 31, 1934. H. BARTELS 1,968,189

TILE PANEL FABRICATING MOLD

Filed Nov. 28, 1932 4 Sheets-Sheet 1

Fig. 1

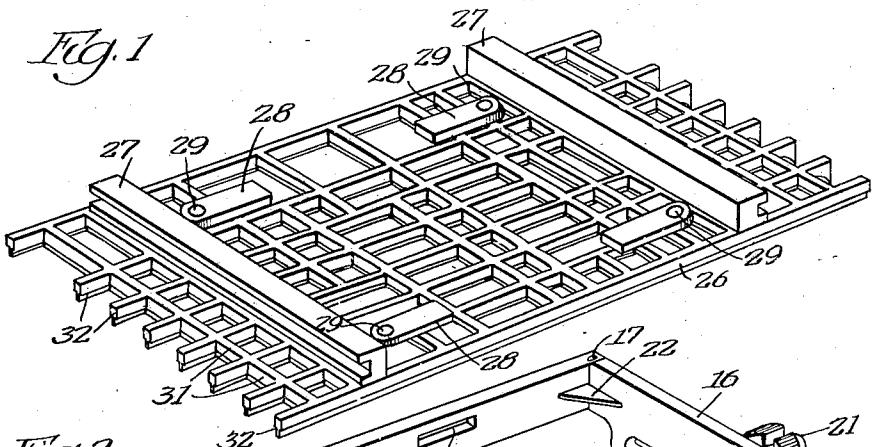

Fig. 2

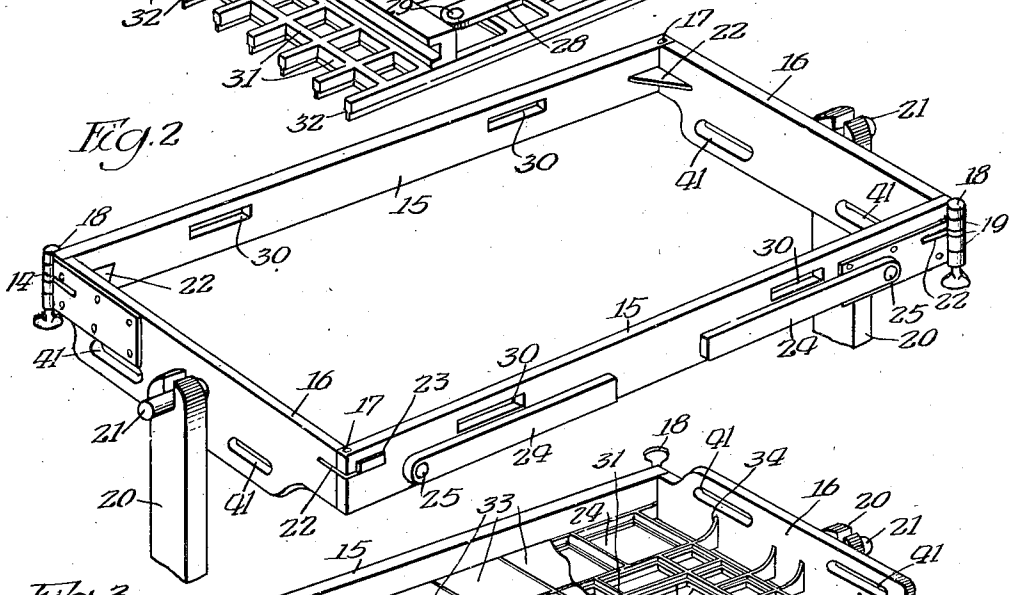

Fig. 3

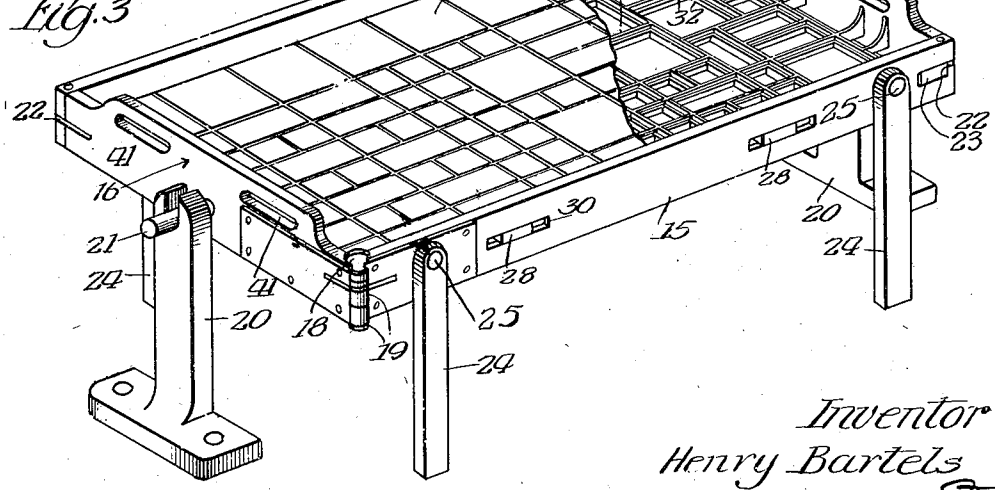

Inventor
Henry Bartels
By [signature] Atty

July 31, 1934. H. BARTELS 1,968,189

TILE PANEL FABRICATING MOLD

Filed Nov. 28, 1932 4 Sheets-Sheet 2

Fig. 4

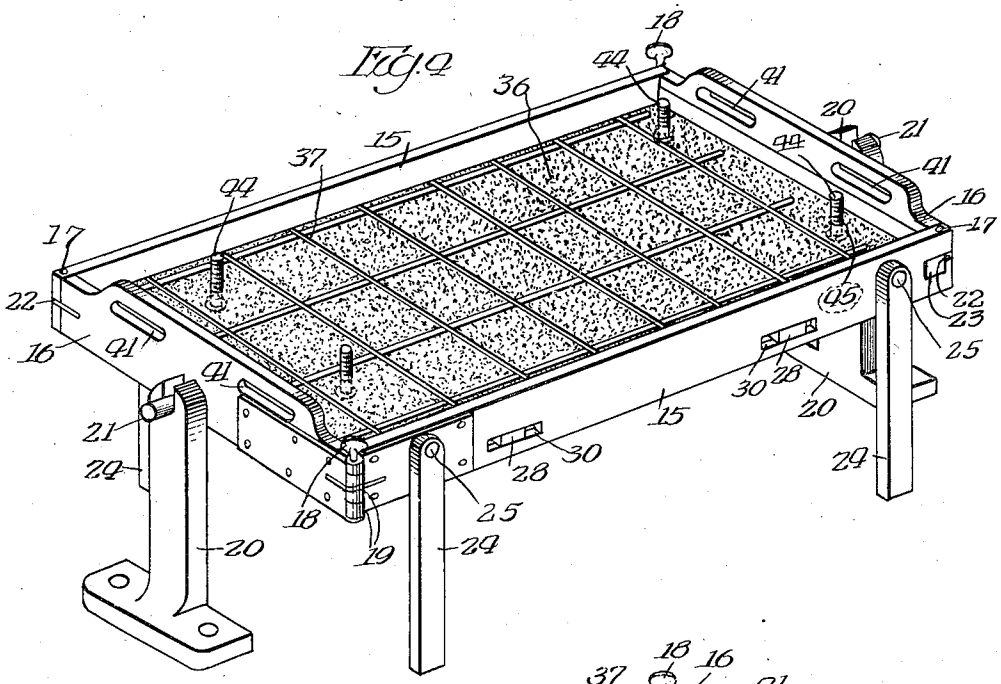

Fig. 5

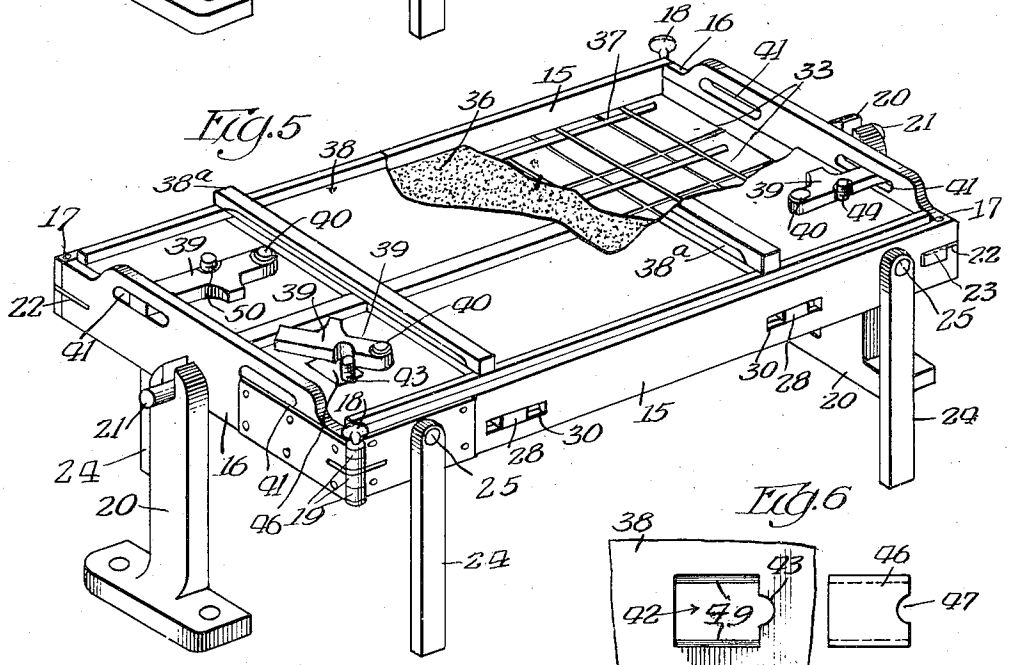

Fig. 6

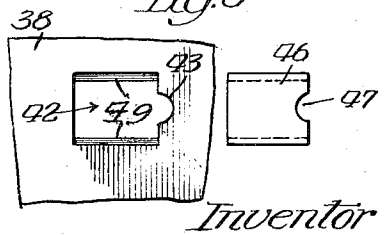

Inventor
Henry Bartels.
By
Atty.

July 31, 1934. H. BARTELS 1,968,189

TILE PANEL FABRICATING MOLD

Filed Nov. 28, 1932 4 Sheets-Sheet 3

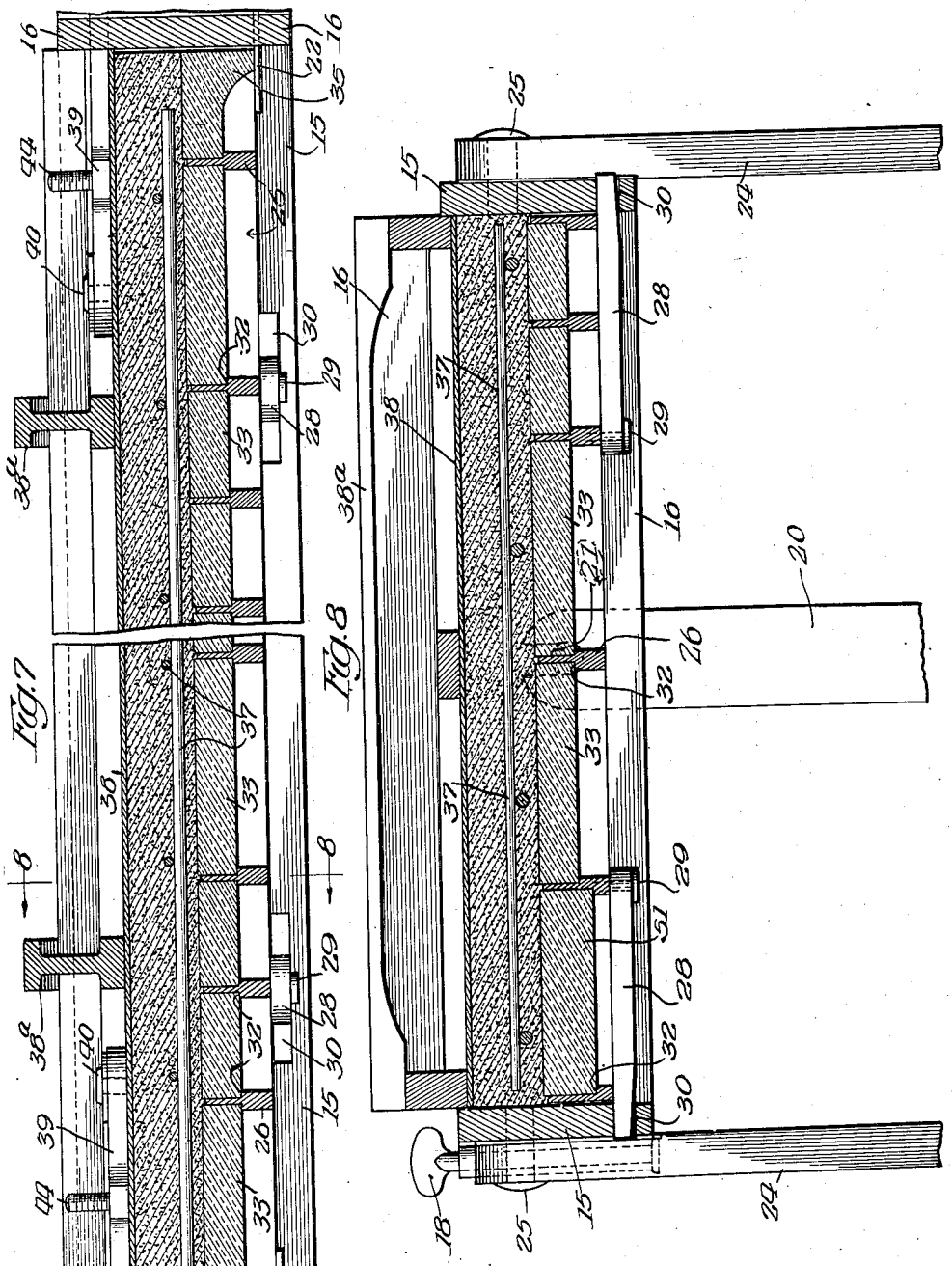

Inventor
Henry Bartels.
By J. Jackson Jr.
Atty

July 31, 1934. H. BARTELS 1,968,189

TILE PANEL FABRICATING MOLD

Filed Nov. 28, 1932 4 Sheets-Sheet 4

Fig. 9

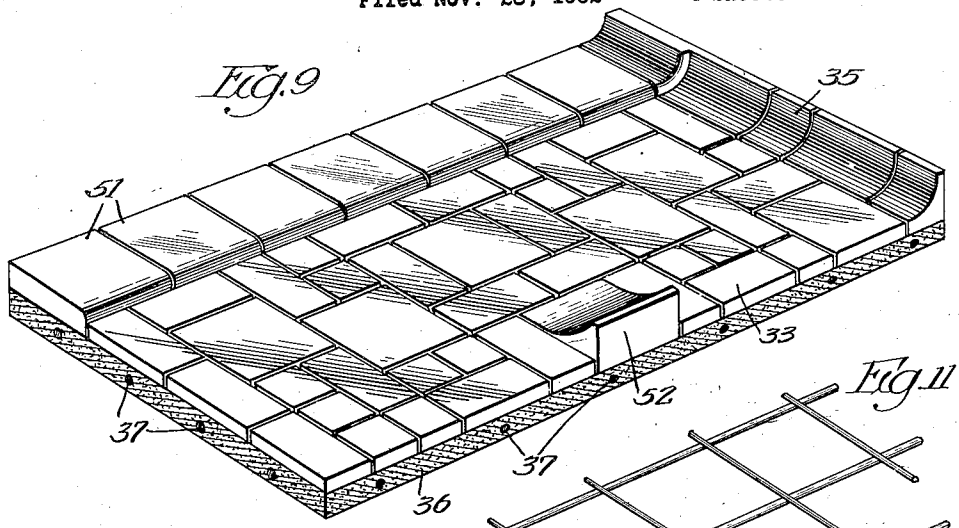

Fig. 11

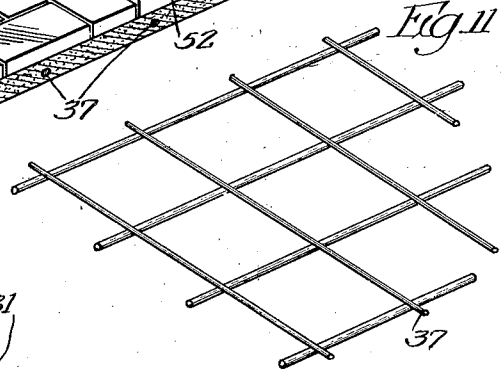

Fig. 10

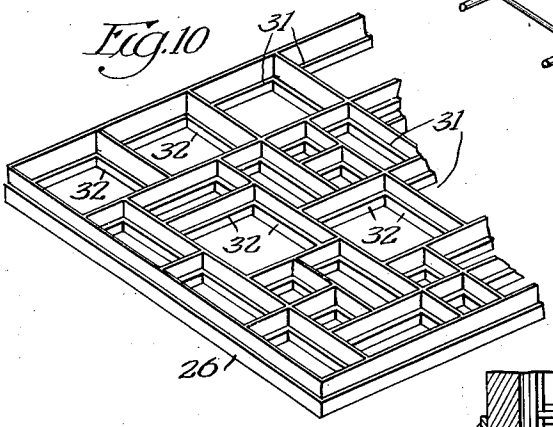

Fig. 12

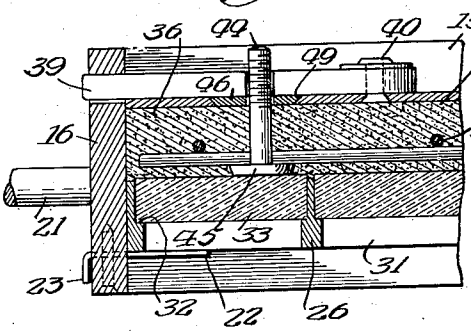

Fig. 13

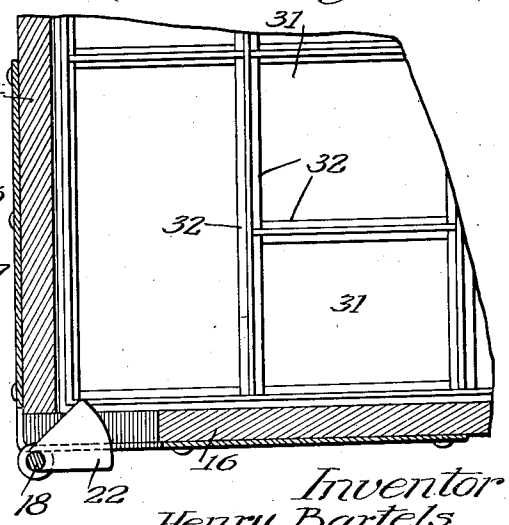

Inventor
Henry Bartels
By Jos. Jochum Fitty

Patented July 31, 1934 1,968,189

UNITED STATES PATENT OFFICE

1,968,189

TILE PANEL FABRICATING MOLD

Henry Bartels, Chicago, Ill.

Application November 28, 1932, Serial No. 644,592

13 Claims. (Cl. 25—41)

This invention relates to improvements in tile panel fabricating molds by means of which a reinforced tile faced panel may be built or fabricated, to be shipped as a complete unit of any desired predetermined area, and then removably secured in position in a building, thereby rendering it possible to not only facilitate the installation of tiling but also rendering it possible to subsequently remove any one or more of the panels for repairs, or other purposes.

A further object is to provide an improved mold mounted in a manner to permit the same to be readily reversed or turned, so that operations may be performed in the construction of the panel from both faces thereof, the mold being collapsible or of a knock down construction to permit ready removal of the completed panel.

To the attainment of these ends and the accomplishment of other new and useful objects as will appear, the invention consists in the features of novelty in substantially the construction, combination and arrangement of the several parts hereinafter more fully described and claimed and shown in the accompanying drawings illustrating this invention and in which

Figure 1 is a perspective view of the bottom member of the mold.

Figure 2 is a perspective view of the collapsible or knock down frame member, and in a position to receive the bottom member.

Figure 3 is a perspective view of the mold reversed from the position shown in Figure 2, with the top member omitted and with tiling placed in the mold, the tiling being partially broken away.

Figure 4 is a perspective view of the mold in the position shown in Figure 3, with the tile, reinforcing member and anchors in position and with the plastic material omitted.

Figure 5 is a perspective view of the mold in the position shown in Figure 4, with the top member of the mold in position and with parts broken away, to show the plastic material, reinforcing member and face of the tile.

Figure 6 is a detail view showing the locking means for the top member of the mold.

Figure 7 is a longitudinal sectional view, on an enlarged scale, as taken to one side of the center of Figure 5, with parts broken away.

Figure 8 is a vertical sectional view taken on line 8—8, Figure 7.

Figure 9 is a perspective view of one of the completed panels, on an enlarged scale.

Figure 10 is a detail perspective view showing the upper surface of the bottom member of the mold, on an enlarged scale.

Figure 11 is a perspective view of one form of reinforcing member for the panel, on an enlarged scale.

Figure 12 is a detail perspective view, on an enlarged scale, of a portion of the mold with all of the parts assembled and showing a portion of the fabricated structure therein.

Figure 13 is a view partly in horizontal section and partly in top plan, with parts omitted, showing a portion of the mold and the upper surface of the bottom member.

Referring more particularly to the drawings, the mold consists essentially of a frame member of any desired dimensions, having sides 15 and end members 16, and these frame members are of any desired height preferably connected together so as to be collapsible and of a knock down formation. To that end one end of each of the side members 15 may be pivotally connected as at 17 with one end of each of the end members 16, and the free ends of the side and end members are preferably detachably connected together by means of pins 18 removably passing through eyes 19 secured to the respective end members and the frame thus formed is removably supported upon uprights 20 by means of lugs or trunnions 21 secured to the end members. The frame thus mounted is adapted to be rotated upon the trunnions 21 so as to invert the frame member during the process of the manufacture or fabrication of the panel.

Supported in the corners of the frame member are members 22 which are adapted to be moved through suitable slots so as to be projected into the frame to form supporting shelves arranged intermediate the upper and lower edges of the side and end members. If desired, two of these members 22 may be secured to the pintles 18 so that by rotation of the pintles the member secured thereto may be moved into and out of the frame. The other members 22 may be provided with a finger engaging portion 23 disposed outside of the frame and by means of which the members may be moved into and out of active position.

When the frame member is in the position shown in Figure 2, it may be so supported and held in any desired or suitable manner such as by means of legs 24 pivotally connected as at 25 to the respective side members. These legs 24 are adapted to move about their pivots 25 into engagement with the floor or supporting surface so as to permit further operation without the frame swinging about its pivot. When, however, it is desired to reverse the frame, the legs are

moved to the folded position as shown in Figure 2, after which the legs 24 are then swung downwardly into engagement with the floor or supporting surface, as shown in Figures 3, 4 and 5.

The numeral 26 designates generally a bottom member for the mold and is of a size and configuration to fit within the frame so that the corners of the bottom 26 will rest upon the supports 22 and these supports are preferably so located that the outer surface of the bottom 21 will be substantially flush with the upper edges of the frame, when the latter is in the position shown in Figure 2. Handle members 27 may be provided, if desired, on the bottom member 26 to facilitate the handling of the latter, and fastening members 28 pivotally connected as at 29 to the bottom member 26 are provided and are adapted to be swung about their pivots so as to enter slots 30 in the frame for locking the bottom member in position.

When the bottom member is secured within the frame member the frame member is reversed to the position shown in Figures 3 to 5, and as before stated, the legs 24 are moved into position to hold the frame member against further swinging movement.

The then upper surface of the bottom member 26 is provided with a series of cavities or subframes 31 arranged in any suitable manner with respect to each other, according to the manner in which it is desired to arrange the tile. These cavities 31 are of any desired size and configuration and are each provided with a supporting ledge or shoulder 32 therein, and spaced from the upper deges of the walls of the cavities so as to form supporting ledges upon which the tile 33 inserted thereinto will rest. The walls of the cavities 31 above the ledges 32 are of a height substantially equal to the thickness of the tile.

If desired, the walls of the cavities 31 adjacent either one or both of the end members 16 of the mold frame, may be curved as at 34 so as to co-operate with the end members 16 of the frame member for the reception of curved tile 35 (see Figure 9).

When the mold is in the position shown in Figure 3, the tile 33 is placed in the various cavities 31, with the rear face of the tile uppermost, and a layer of plastic material 36 is placed over the rear surface of the tile, to any desired thickness. A reinforcing member 37 is then placed upon the plastic material and may, if desired, be forced into the plastic material. This reinforcing member 37 is preferably of a configuration to substantially extend across the mold frame. Additional plastic material is then placed into the mold over the reinforcing member and the mold is filled with the plastic material. A top member 38 is then placed upon the frame member and is secured in position in any suitable manner such as by means of fastening devices 39 pivotally mounted as at 40 upon the member 38. Any suitable number, preferably two, of the fastening devices 39 may be provided at each end of the member 38 and are adapted to be projected into the slots 41 in the end members 16 of the frame member.

The top member 38 is provided with openings 42 therein having reduced extensions 43, through which openings 42, anchor members 44 are adapted to project so as to extend above the member 38. The openings 42 are of any suitable dimensions and may, if desired, be of a size to permit the heads 45 on the anchor members 44 to be passed therethrough and embedded in the plastic material 36, the anchor members being moved to a position that they will project through the reduced portion or extension 43 of the openings. A cover member 46 having a recess 47 in one edge thereof may be provided for closing the openings 42 and when in position, the recess 47 will co-operate with the extension 43 so as to receive a portion of the shank of the anchor member.

If desired, the wall of the opening 42 may be beveled as at 49 (see particularly Figure 12) and the edge of the member 46 may also be beveled so as to prevent the closure member 46 from falling through the opening 42. When the member 46 is placed in position, it will rest upon the plastic material 36.

When the anchor members 44 are in position, as well as the closure member 46, the fastening devices 39 are swung about their pivots so as to be projected into the slots 41 and the fastening members 39 may be provided with a recess 50 to receive the shank of the anchor member 44 as shown more clearly in Figure 5.

After the top member 38 has been secured in position as shown in Figure 5, the legs 24 may be folded to the position shown in Figure 2 and then the entire mold reversed so as to bring the bottom member 26 uppermost, thereby causing the frame member to assume the position shown in Figure 2. The legs 24 may then be swung downwardly so as to support the frame in this position to permit the removal of the bottom member 26.

It will be manifest that after this bottom member 26 is removed, the tile face of the panel will be uppermost and while the panel is still in the mold the operator can then adjust the tile or perform any other operation on the face of the panel desired, before removing the panel from the mold.

After the bottom member 26 has been removed, the mold may then be removed from the standards 20 and the frame detached, separated or collapsed so as to remove the same from around the edges of the panel.

Obviously, the fabricated structure may be allowed to remain in the mold for any desired length of time to permit the material to become set.

If desired and in order to produce a projecting portion 51 (see Figure 9 of the drawings) on the panel, such as a beading, the supporting shoulders or ledges 32 of the cavities 31 may be arranged in a lower plane than the plane of the supporting shoulders 32 of the remaining cavities and, likewise, if it is desired to produce a ledge 52 (see also Figure 9) the supporting ledges 32 in the corresponding cavities 31 may be properly arranged.

With this apparatus it will be manifest that a panel of any desired configuration may be fabricated in the factory and shipped to the point of use where it may be installed upon suitable supporting structure and secured thereto by the anchor or fastening members 44. At any time any one or more of the panels may be readily removed without interfering with the remaining panels and the entire structure may as readily be removed from a building.

While the preferred form of mold and the steps in carrying this method into operation have been herein shown and described, it is to be understood that various changes may be made in the details of construction and combination and arrangement of the several parts of the mold, and various changes may be made in the steps of the process of forming the article, within the scope of the

claims, without departing from the spirit of this invention.

What is claimed as new is:—

1. A mold of the character described comprising an open frame of knock down construction, top and bottom members forming closures for the frame, means projectable into the frame for removably supporting one of said members with respect to the frame, means individual to said members for removably securing the said members in position with respect to the frame, and means for supporting and adapting said frame to be turned to position either of said members uppermost, access being freely had to the interior of the frame from the top and bottom thereof when they are respectively uppermost.

2. A mold of the character described comprising an open frame, top and bottom members forming closures for the frame, means for removably supporting one of said members with respect to the frame, means individual to said members for removably securing the said members in position with respect to the frame, one of said members having open seats formed in the face thereof for the reception of individual tiles, and means for supporting and adapting said frame to be turned to position either of said members uppermost, access being freely had to the interior of the frame from the top and bottom thereof when they are respectively uppermost.

3. A mold of the character described comprising an open frame, top and bottom members forming closures for the frame, means temporarily projectable into the frame for removably supporting one of said members with respect to the frame, means individual to said members for removably securing the said members in position with respect to the frame, means for supporting and adapting said frame to be turned to position either of said members uppermost, and means for maintaining the frame against turning movement with respect to said supporting means, access being freely had to the interior of the frame from the top and bottom thereof when they are respectively uppermost.

4. A mold of the character described comprising an open frame, top and bottom members forming closures for the frame, means for removably supporting one of said members with respect to the frame, means individual to said members for removably securing them in position with respect to the frame, means for supporting and adapting said frame to be turned to position either of said members uppermost, one of said members having apertures therethrough through which work anchoring elements project from the interior of the mold, and closures for said apertures, said closures and one of the walls of the respective apertures having recesses to receive said anchoring elements.

5. A mold of the character described comprising an open frame, top and bottom members forming closures for the frame, means for removably supporting one of said members with respect to the frame, means individual to said members for removably securing them in position with respect to the frame, means for supporting and adapting said frame to be turned to position either of said members uppermost, one of said members having apertures therethrough through which work anchoring elements project from the interior of the mold, and closures for said apertures, said closures and one of the walls of the respective apertures having recesses to receive said anchoring elements, the said securing means for the member which is provided with said openings, serving as means for securing the second recited closures against displacement.

6. A mold of the character described comprising an open frame member of collapsible or knock down construction, supports carried by and movable into and out of the frame, a closure for one face of the frame adapted to rest upon said supports, means for removably securing said closure member to the frame, means mounting the frame to be turned to cause the said member to temporarily constitute the bottom of the mold, said supports being removed from the frame when the frame is thus turned, a closure for the top of the mold thus formed, and means for removably securing the last recited member in position with respect to the frame.

7. A mold of the character described comprising an open frame member of collapsible or knock down construction, supports carried by and movable into and out of the frame, a closure for one face of the frame adapted to rest upon said supports, means for removably securing said closure member to the frame, means mounting the frame to be turned to cause the said member to temporarily constitute the bottom of the mold, said supports being removed from the frame when the frame is thus turned, a closure for the top of the mold thus formed, means for removably securing the last recited member in position with respect to the frame, and means for maintaining said frame against turning movement when either of the faces thereof are uppermost.

8. A mold of the character described comprising an open frame member of collapsible or knock down construction, supports carried by and movable into and out of the frame, a closure for one face of the frame adapted to rest upon said supports, means for removably securing said closure member to the frame, supports upon which the frame is removably mounted for turning movement to cause the said member to temporarily constitute the bottom of the mold, a closure for the side of the frame constituting the top of the mold, and means for removably securing the last said closure in position with respect to the frame.

9. A mold for fabricating a tile panel comprising an open frame, closure members individual to the faces of the frame, means temporarily projectable into the frame for assisting in holding one of said members in position to be locked with respect to the frame, means for removably locking said member in position with respect to the frame, means for removably securing the other of said members to the frame, and means for detachably supporting and adapting said frame to be positioned with either of its faces uppermost, said frame being of collapsible or knock down construction, access being freely had to the interior of the frame from the top and bottom thereof when they are respectively uppermost.

10. A mold for fabricating a tile panel comprising an open frame, closure members individual to the faces of the frame, means temporarily projectable into the frame for assisting in holding one of said members in position to be locked with respect to the frame, means for removably locking said member in position with respect to the frame, means for removably securing the other of said members to the frame, and means supporting and adapting said frame to be positioned with either of its faces uppermost, one of said members being provided on that face

thereof which is in the mold with cavities or recesses for the reception of individual tile elements and upon which tile elements plastic material is deposited in the mold to bind the tile into a panel element, access being freely had to the interior of the frame from the top and bottom thereof when they are respectively uppermost.

11. A mold for fabricating a tile panel, comprising an open frame mounted to position either face thereof uppermost, closures individual to the faces of the frame, means individual to the closures for securing them to the frame and in spaced relation to each other whereby they may be separately removed from the frame, means for maintaining the frame in a horizontal position with either of its faces uppermost, and means constituting a part of the inner face of one of said closures for holding individual tile members separated from each other while plastic material is being placed within the mold and between the tile members, access being freely had to the interior of the frame from both faces thereof when they are respectively uppermost.

12. A mold of the character described comprising a bottom member, a top member, said top member having apertures therethrough through which work anchoring elements project from the interior of the mold, and closures for said apertures, said closures and one of the walls of the respective apertures having recesses to receive said anchoring elements.

13. A mold of the character described comprising a bottom member, a top member, said top member having apertures therethrough through which work anchoring elements project from the interior of the mold, closures for said apertures, said closures and one of the walls of the respective apertures having recesses to receive said anchoring elements, and means for securing the top member in position, said securing means also serving as means for securing the closures for the apertures against displacement.

HENRY BARTELS.