June 27, 1933. T. V. MOORE ET AL 1,915,436

GAS AND LIQUID SEPARATOR

Filed Aug. 22, 1930

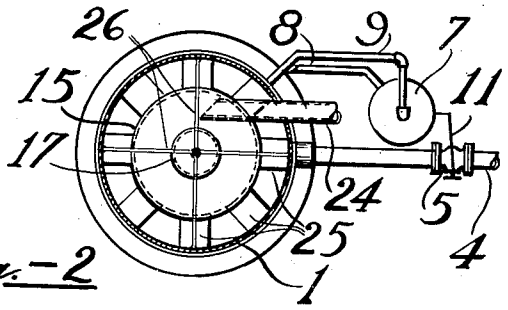

Fig.-2

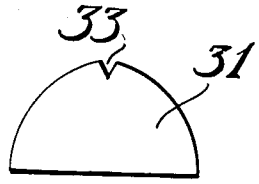

Fig.-5

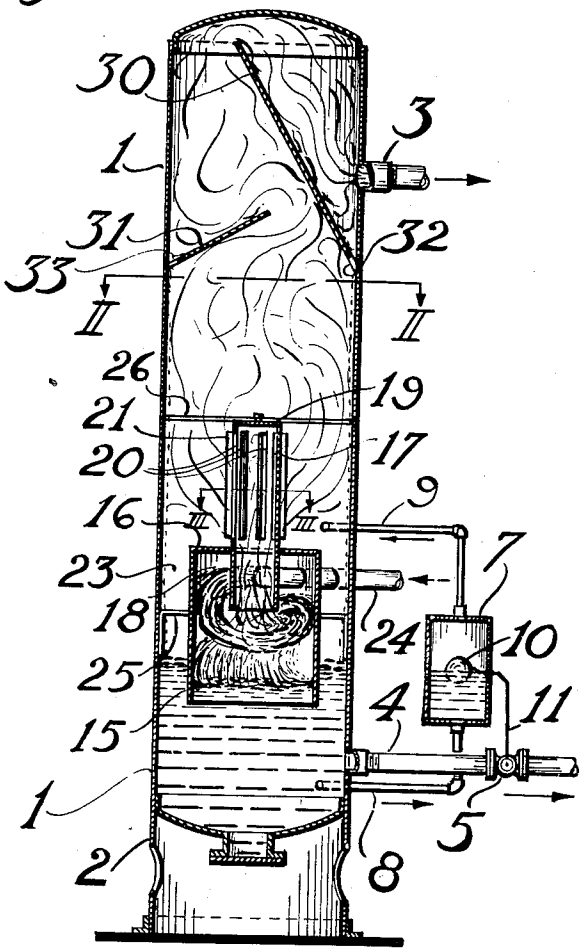

Fig.-1

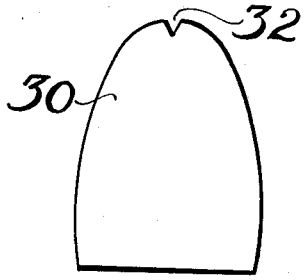

Fig.-4

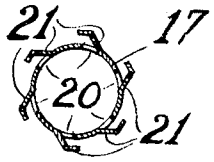

Fig.-3

Inventors

T. V. Moore

H. D. Wilde, Jr.

By

W. E. Currie Attorney

Patented June 27, 1933 1,915,436

UNITED STATES PATENT OFFICE

THOMAS V. MOORE AND HENRY D. WILDE, JR., OF HOUSTON, TEXAS, ASSIGNORS TO STANDARD OIL DEVELOPMENT COMPANY, A CORPORATION OF DELAWARE

GAS AND LIQUID SEPARATOR

Application filed August 22, 1930. Serial No. 477,010.

This invention relates to the separation of gas from liquid, such as hydrocarbon oils, with which it is intermixed. The invention will be fully understood from the following description taken in connection with the accompanying drawing, in which latter

Fig. 1 is a longitudinal sectional view through a separator;

Fig. 2 is a transverse sectional view taken along the line II—II of Fig. 1;

Fig. 3 is a transverse sectional view taken along the line III—III of Fig. 1;

Fig. 4 is a side elevation of a baffle; and

Fig. 5 is a side elevation of an auxiliary baffle.

Referring to the drawing, reference numeral 1 designates a shell which is carried in substantially vertical position by a support 2. The shell is provided at its upper portion with an outlet opening 3 through which gas, free from entrained liquid, is adapted to be discharged. The shell is provided at its lower portion with a discharge opening to which is connected an outlet pipe 4 having a valve 5. Means are provided for maintaining a predetermined level of liquid in the bottom of the shell. The means comprises a container 7 which communicates through a line 8 with the interior of the shell below the normal level of liquid in the shell. The upper portion of container 7 communicates with the interior of the shell above the normal level of liquid in the shell by means of a line 9. A float 10 is disposed within the container 7 and is adapted to actuate valve 5 through a connection 11.

An assembly through which the mixture of gas and liquid is first passed is disposed in the shell. The assembly includes a tube 15 having a closed end 16. A tube 17 of relatively small diameter projects through the closed end 16 and terminates within the larger tube to form an annular chamber 18 with a portion only of the larger tube. Tube 17 is provided with a closed end 19 exteriorly of the larger tube and has openings 20 in its side walls intermediate its closed end 19 and the closed end 16 of the larger tube. Vanes 21 project outwardly tangentially over the openings from an edge of each opening 20 of the smaller tube 17.

The assembly is disposed in the lower portion of the shell in spaced relation to the side walls of the shell to form an annular passage 23 with the side walls. The assembly is disposed in spaced relation to the bottom of the shell and provides a reservoir for the separated liquid between the assembly and the bottom of the shell. A conduit 24 leads into the shell and opens tangentially through tube 15 into the upper portion of the annular chamber 18. The assembly is supported in spaced relation to the shell by means of the spaced supports 25 and by means of the rods 26 with the open end of the annular chamber opening downwardly.

The mixture of gas and liquid is injected through conduit 24 into the upper portion of the annular chamber 18 under sufficient pressure to cause the mixture to travel in a helical path downwardly through the annular chamber at sufficient speed to centrifugally separate the major portion of the gas and liquid. The liquid is forced to the radially outer portion of the annular chamber while the gases seek the radially inner portion of the annular chamber. The thus separated liquid falls by gravity into the reservoir at the bottom of the shell where it is permitted to accumulate to a level intermediate the open end of the larger tube 15 and the annular chamber 18. Float 10 is adjusted to maintain this level of separated liquid in the shell. Consequently the separated gas reverses its general direction of travel and flows upwardly through the relatively small tube 17 and is discharged from the tube through the openings 20 into the relatively large zone constituted by the portion of the shell above the assembly.

In issuing from the openings 20, the gas is caused to assume a rotatory motion due to the tangentially projecting vanes 21. The friction drop of the gas issuing from these openings is balanced by the hydrostatic head of oil which is maintained at a higher level in the annular passage 23 than in the larger tube 15 as can be clearly seen in Fig. 1 of the drawing. The velocity of the gas which normally

carries some entrained liquid is greatly reduced in passing through the enlarged zone and the carrying power of the gas for the entrained fluid is reduced to a minimum. In case the mixture of gas and liquid is introduced into the assembly under relatively high pressures and the pressure of the gas forces the liquid in the reservoir below the level of the inner tube 15 and thus permits the gas to escape from the assembly through the annular passage 23 rather than through the pipe 17. In such a case, the supports 25 for the assembly function as baffles to effect the extraction of entrained liquid from such gas as does pass through this annular passage.

Baffles 30 and 31 are provided in the upper portion of the shell at a substantial distance from the assembly. Baffle 30 consists of a plate which extends transversely across the shell from the wall adjoining the upper opening upwardly between the assembly and opening and terminates beyond the opening in spaced relation to the shell. In the preferred embodiment this baffle extends at an angle of approximately 30° to the center line of the shell. The baffle is provided, adjacent its lowest point, with an opening 32 as can be seen in Fig. 4. By this construction any liquid collected by the baffle can be returned through the opening down the side wall of the shell to the main body of liquid in the bottom of the shell without re-entrainment of any of the liquid in the gas. A large portion of the entrained liquid is normally deposited upon the upper surface of baffle 30. The baffle is inclined at such an angle that a relatively small quantity of the separated liquid will build up sufficient hydrostatic head to force the liquid through opening 32 and be delivered to the main body of liquid in the bottom of the shell. Due to the sharp inclination of this baffle, the velocity heads of the gas on opposite sides of the baffle tend to balance and thereby keep the pressure drop across opening 32 at a minimum, when the small quantity of separated liquid passes downwardly to the main body of liquid in the bottom of the shell.

Baffle 31 comprises a plate which extends upwardly transversely across the shell from the wall of the shell opposite the first mentioned baffle toward, and terminates, in spaced relation to the lower portion of the first mentioned baffle plate. Baffle 31 is provided with an opening 33 at approximately the lowest point of the junction of the baffle with the shell wall. Any of the entrained liquid which accumulates upon the upper surface of this baffle is returned through opening 33 down the side wall of the shell to the reservoir. Baffles 30 and 31 co-operate to cause substantially reversal of direction of gas flow. In the preferred embodiment the change in direction of gas flow may approximate 270°. The gas is caused to pass over a large scrubbing surface before finally passing out of the separator through opening 3.

By the construction described centrifugal force is utilized for the separation of gas from a mixture of gas and liquid. The speed of travel of the separated gas is then reduced to a minimum and thereby the carrying power of the gas for entrained liquid is minimized. The greatest possible reversal of flow of the thus treated gas is then effected and a maximum of scrubbing surface is presented to the gas.

Various changes may be made within the scope of the appended claims, in which it is desired to claim all novelty inherent in the invention as broadly as the prior art permits.

We claim:

1. A separator, comprising a shell, an assembly in the shell including a tube having a closed end, and a tube of relatively small diameter projecting through the closed end, and terminating within the larger tube to form an annular chamber with a portion only of the larger tube, the smaller tube having a closed end exteriorly of the larger tube and having openings in its side walls intermediate its closed end and the closed end of the larger tube, the assembly disposed in the shell with the annular chamber opening downwardly, the assembly being in spaced relation to the side walls of the shell to form an annular passage therewith and disposed in spaced relation to the bottom of the shell, and a conduit opening tangentially into the annular chamber, the shell having discharge openings above and below the assembly.

2. A separator according to claim 1 including vanes projecting outwardly tangentially over the openings from an edge of the openings of the smaller tube.

3. A separator according to claim 1 including means for maintaining a level of liquid in the shell intermediate the open end of the larger tube and the annular chamber.

4. A separator, comprising a shell, an assembly in the shell including a tube having a closed end, a tube of relatively small diameter projecting through the closed end and terminating within the larger tube to form an annular chamber with a portion only of the larger tube, the smaller tube having a closed end exteriorly of the larger tube and having openings in its side walls intermediate its closed end and the closed end of the larger tube, and vanes projecting outwardly tangentially over the openings from an edge of the openings, the assembly disposed in the shell with the annular chamber opening downwardly, the assembly being in spaced relation to the side walls of the shell to form an annular passage therewith and disposed in spaced relation to the bottom of the shell, a conduit opening tangentially into the annular chamber, the shell having openings above and below the assembly, means for

maintaining a level of liquid in the shell intermediate the open end of the larger tube and the annular chamber, and a baffle in the shell extending across the shell from the wall adjoining the upper opening upwardly between the assembly and opening and terminating beyond the opening in spaced relation to the shell, the baffle having an opening adjoining the wall.

5. A separator according to claim 4 including an auxiliary baffle extending upwardly across the shell from the wall of the shell opposite the first mentioned baffle toward, and terminating, in spaced relation to the lower portion of the first mentioned baffle, the baffle having an opening adjoining the junction of the baffle with the wall.

THOMAS V. MOORE.
HENRY D. WILDE, Jr.