June 6, 1933. F. M. CARTER 1,913,066

PORTABLE INSULATED BUILDING

Filed Sept. 9, 1931 3 Sheets-Sheet 1

Fig. 1.

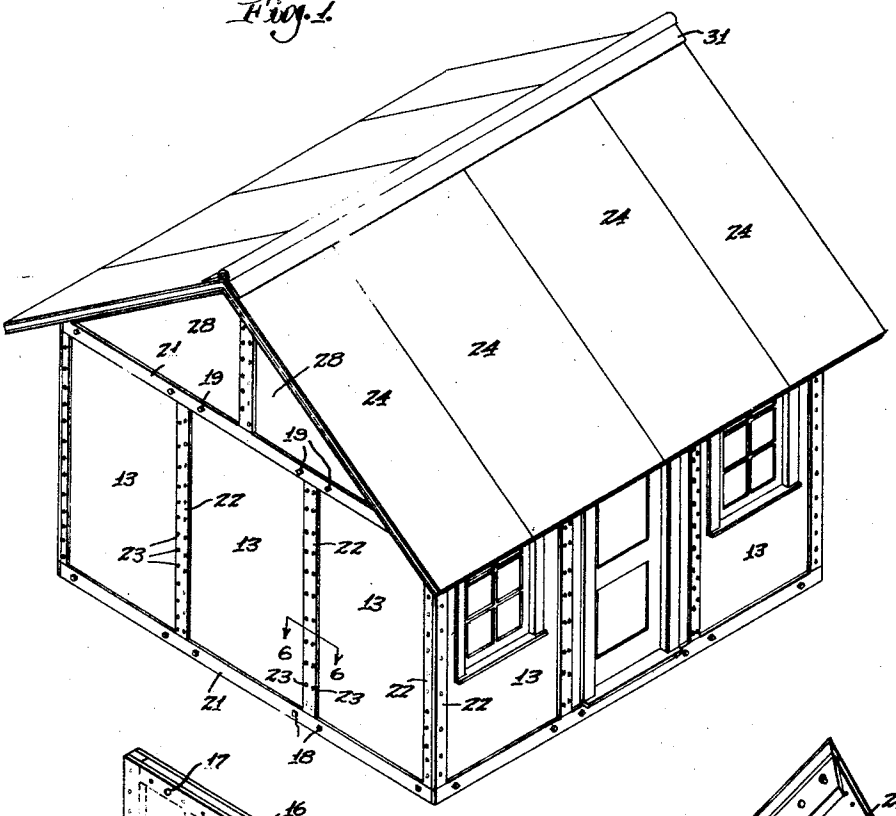

Fig. 7.

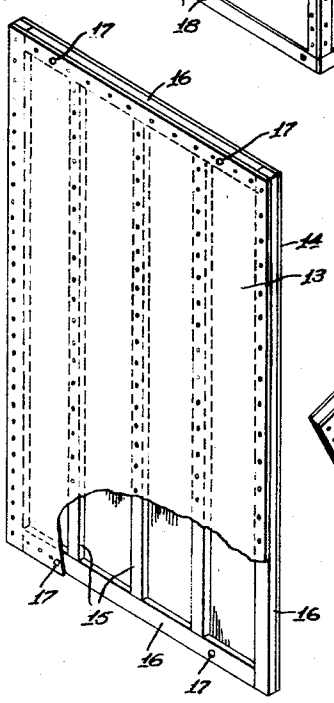

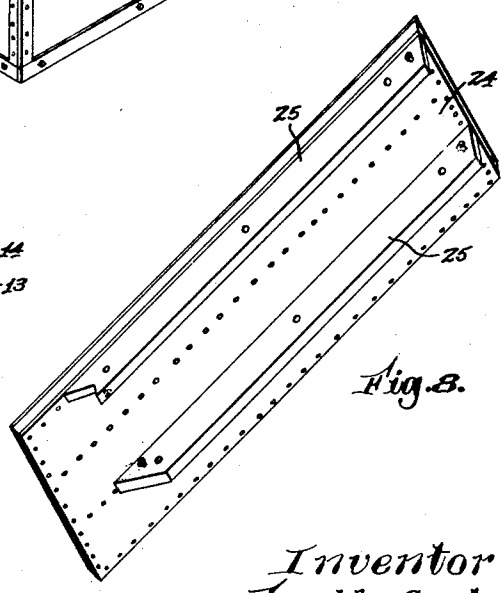

Fig. 8.

Inventor
Fred M. Carter

by W. Harrison
Attorney

June 6, 1933. F. M. CARTER 1,913,066

PORTABLE INSULATED BUILDING

Filed Sept. 9, 1931 3 Sheets-Sheet 2

Fig. 2.

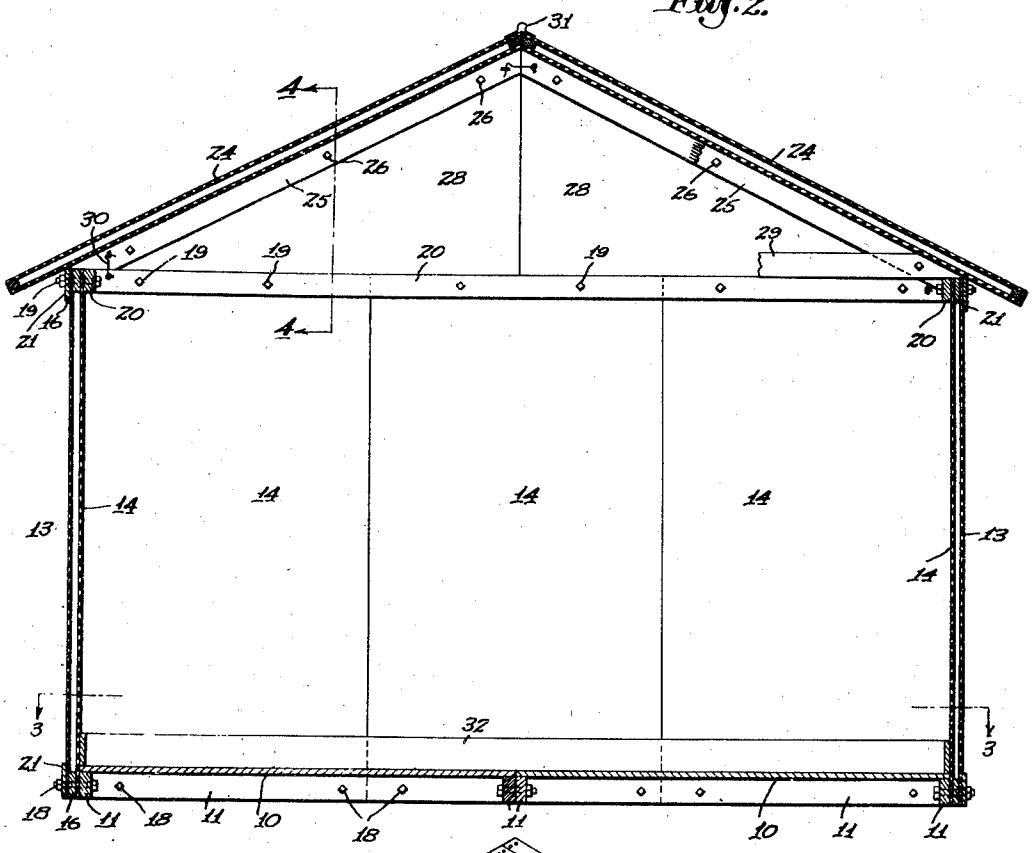

Fig. 5.

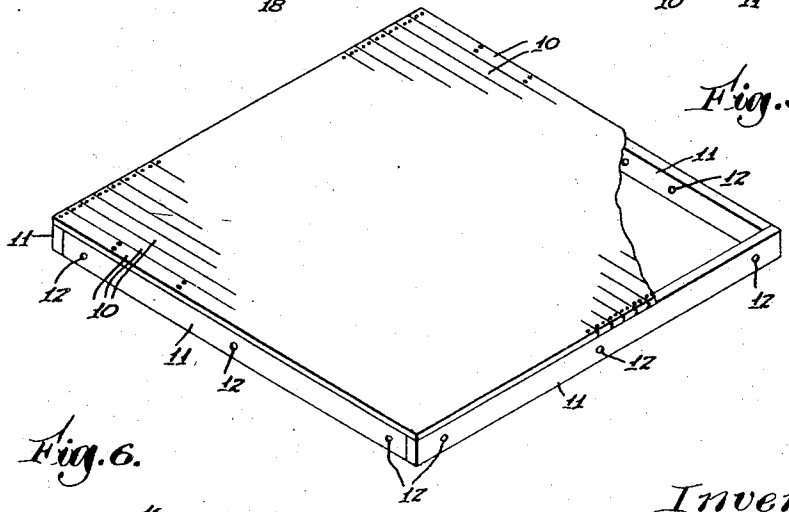

Fig. 6.

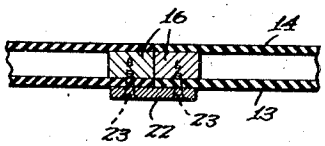

Inventor
Fred M. Carter
by A. H. Harrison
Attorney

June 6, 1933. F. M. CARTER 1,913,066

PORTABLE INSULATED BUILDING

Filed Sept. 9, 1931 3 Sheets-Sheet 3

Fig. 3.

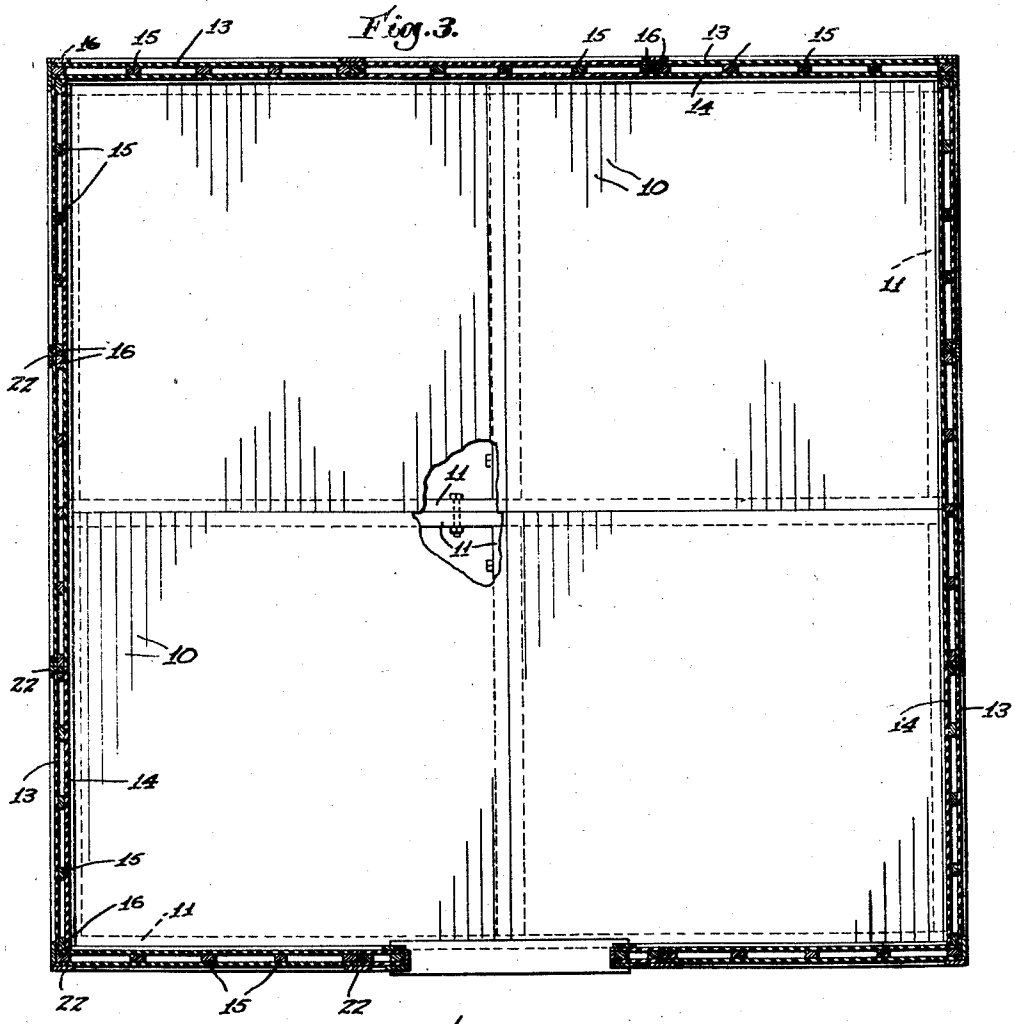

Fig. 4.

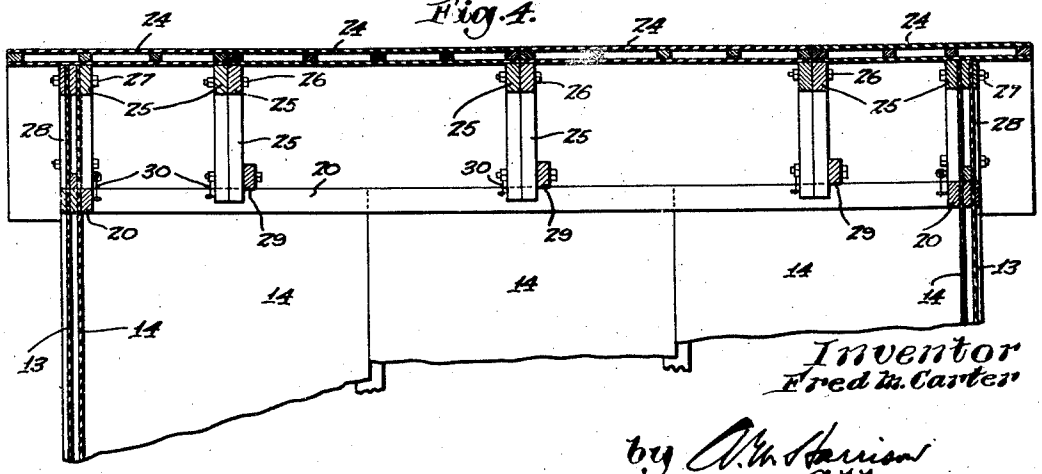

Inventor
Fred M. Carter

by A. M. Harrison
Attorney

Patented June 6, 1933 1,913,066

UNITED STATES PATENT OFFICE

FRED M. CARTER, OF CONCORD, NEW HAMPSHIRE

PORTABLE INSULATED BUILDING

Application filed September 9, 1931. Serial No. 561,831.

This invention relates to buildings suitable for use as overnight cabins for tourists, or for other uses such as hereinafter described, and has particular reference to structures of a type capable of being easily shipped in units from the place of production to any location for setting up and use, or to be moved from one location to another.

One of the objects of my invention is to produce such buildings which are low in cost and yet provide places of residence which will be comfortable owing to their being insulated against heat and cold, and rainproof, and as nearly sound proof as possible.

Another object is to provide such buildings which are frameless and yet capable of withstanding inclemencies of weather.

Another object is to provide such buildings made of sections or units which are easily connectible together to set the buildings up for use, or which can be readily disconnected to facilitate transportation from one location to another.

With said objects in view, and others hereinafter explained, my invention consists in the construction and combinations of parts substantially as hereinafter described and claimed.

Of the accompanying drawings:—

Figure 1 is a perspective view of one of my improved cabins.

Figure 2 represents a transverse section of the same.

Figure 3 represents a section on line 3—3 of Figure 2, and partly broken out.

Figure 4 represents a section on line 4—4 of Figure 2.

Figure 5 is a perspective view of one of the floor units.

Figure 6 represents a section on line 6—6 of Figure 1, on a larger scale.

Figure 7 is a perspective view of one of the wall units.

Figure 8 is a similar view of one of the roof units.

Similar reference characters indicate similar parts or features in all of the views.

For convenience of explanation, the structure of the floor will be first described. Said floor, when the cabin is rectangular and of equal dimensions from front to rear and laterally, comprises four units which are uniform in size and shape. Each unit (Fig. 5) consists of boards 10 the ends of which are nailed to four marginal or base frame strips or sills 11, the latter having holes 12 for bolts presently described.

Such material as referred to for the sheets 13, 14, is non-metallic and requires no special treatment of any kind to prevent or restrict the transmission of heat. In other words, it is inherently heat-insulating material.

The walls are composed of sections or units each of which (Fig. 7) comprises a single outer sheet 13 and a single inner sheet 14, with intervening spacing strips 15 and intervening marginal strips 16. The sheets 13, 14, are of inherently insulating material such as "Masonite" or "J M board", and the intervening strips 15, 16, may be of wood. Said strips not only provide for holding the sheets 13, 14, apart to provide air spaces in all of the wall units, but also ensure such strength in the units as to require no framework for the walls of the building. The inner and outer sheets and the intervening wood strips are held in their relative assembled positions by nails or brads.

The upper and lower strips 16 have bolt holes 17 (Fig. 7), and bolts 18 (Fig. 2) pass through the holes in the lower strip 16 and through the holes 12 of the floor sills 11. And the upper margins of the wall units are similarly secured by bolts 19 to long strips 20 which maintain the wall units in close edgewise relationship. Long outer strips 21 (Figs. 1 and 2) are also preferably employed, the bolts 19 passing also through holes in said long strips.

To aid in retaining the wall units in edgewise relationship, and to cover any crevices that might exist between their abutting edges, vertical batten strips 22 are secured to the margins of such abutting units by screws 23 passing through the margins of the sheets 13 into the strips 16 (Figs. 1 and 6).

The roof is composed of sections or units

each of which, like the wall units, consists of two sheets of insulating material similar to the sheets of the wall units, said sheets being spaced by, and strengthened by, intervening wood strips, said sheets and strips being united by nails or brads, all substantially the same as the wall units. The roof units are illustrated at 24 in Figures 1, 2, 4 and 8. Each has a pair of longitudinal struts 25 bolted to it, the ends of said struts being bevelled or notched to fit other parts hereinafter described. Said struts extend along the side margins of the units except the end units each of which (Figs. 4 and 8) has one of the struts some distance in or away from the margin.

Those struts 25 which are marginal are secured to the marginal struts of the adjoining roof units by bolts 26 (Figs. 2 and 4) while the outer struts of the two end units are secured by bolts 27 to the upper margins of the triangular wall units 28 (Figs. 1, 2 and 4). Said triangular units 28 are made of material like the units described in connection with Figure 7, and need no repetition as to their structure.

As illustrated by comparing Figures 2 and 4, the lower ends of some of the roof struts 25, at opposite sides of the cabin, are connected together by horizontal bracing strips 29.

The lower ends of all of the struts 25, except the outer-most ones of the end roof units, are notched to fit over the long connecting strips 20 of the wall sections or units, and then when the various units are assembled, they are connected together as by hooks 30.

A suitable ridge-covering member is indicated at 31 in Figures 1 and 2, said member being secured by any preferred means. In practice it may sometimes be desirable to employ strips covering the crevices between the roof units, similar to the batten strips 22 employed for the wall units.

When the various units are assembled by the bolts and hooks described, either before complete assembly or after it, the entire cabin may be mounted in any preferred way, as on posts not necessary to illustrate. And inner sills may be fitted as indicated at 32 in Figure 2.

Some of the wall units are cut out to provide openings for the fitting of windows and a door, which fitting may be effected in any preferred manner.

The building or cabin as a whole is practically frameless and is therefore easily portable in that the various units are readily transportable from one place to another and capable of being set up for occupancy without requiring any carpenter's work or skilled labor. Therefore if occasion arises for moving it from one location to another, the cost of transporting it is far less than would be required if it had to be moved while in set up condition.

As stated above, the building is practically frameless. This is because the strips 15, 16, are sufficient to effect ample support for the walls of the structure, and said walls alone, with no additional framing, support the roof. And since said strips are concealed between the sheets 13, 14, the structure as a whole presents perfectly smooth walls both inside and outside. The said strips serve two purposes. They maintain the two sheets 13, 14, smoothly apart to provide permanent air spaces, and also render entirely unnecessary the employment of any such framework as required in the usual lightly-constructed buildings.

While I have referred to the structure as being especially suitable for cabins to be occupied as temporary residences, it is to be understood that the same structure is useful for garages, bath-houses, booths for country fairs, etc. Therefore it is to be understood that the term cabin is employed in a generic sense applicable to any building regardless of what is to be accommodated therein.

Having now described my invention, I claim:—

1. A portable building comprising rectangular floor units having marginal sill strips providing spaces below the flooring, the walls being composed of a plurality of sections each of which consists of a pair of thin sheets of fibrous insulating material having spacing members at its margins, the sections of each wall having their upper edges bonded together in edgewise abutting relationship by inner and outer strips and bolts extending through said strips and the marginal spacing members of the sections, the lower edges of the sections of each wall being bonded together by outer strips and bolts extending through said outer strips and the lower marginal spacing members of the sections and the sill strips of the floor units.

2. A portable building comprising rectangular floor units having marginal sill strips providing spaces below the flooring, the walls being composed of a plurality of sections each of which consists of a pair of thin sheets of fibrous insulating material having spacing members at its margins, the sections of each wall having their upper edges bonded together in edgewise abutting relationship by inner and outer strips and bolts extending through said strips and the marginal spacing members of the sections, the lower edges of the sections of each wall being bonded together by outer strips and bolts extending through said outer strips and the lower marginal spacing members of the sections and the sill strips of the floor units, and batten strips overlapping the abutting edges of the wall sections.

3. A portable building comprising rectan-

gular floor units having marginal sill strips providing spaces below the flooring, the walls being composed of a plurality of sections each of which consists of a pair of thin sheets of fibrous insulating material spaced apart by wood strips at the margins thereof and by vertical wood strips in locations between said margins, said insulating material and the marginal strips being secured tightly together to provide airtight spaces in the sections, the sections of each wall having their upper edges bonded together in edgewise abutting relationship by inner and outer strips and bolts extending through said strips and the marginal spacing members of the sections, the lower edges of the sections of each wall being bonded together by outer strips and bolts extending through said outer strips and the lower marginal spacing members of the sections and the sill strips of the floor units.

In testimony whereof I have affixed my signature.

FRED M. CARTER.