Aug. 30, 1932. F. L. SCOTT ET AL 1,874,066

COMBINATION ROLLING AND SCRAPING CUTTER DRILL

Filed April 28, 1930

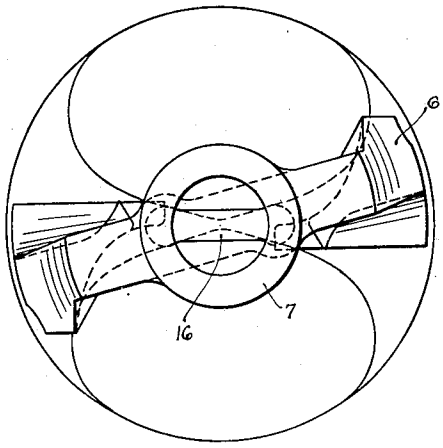

Fig. 3.

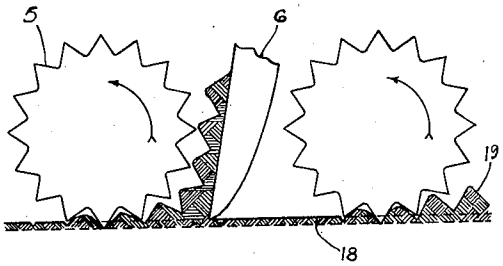

Fig. 4

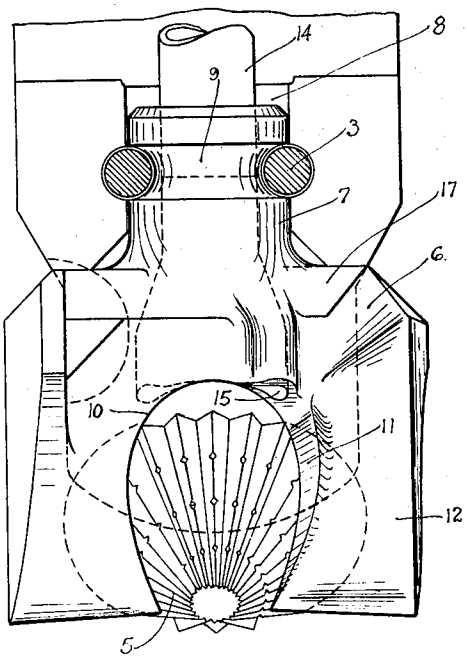

Fig. 1

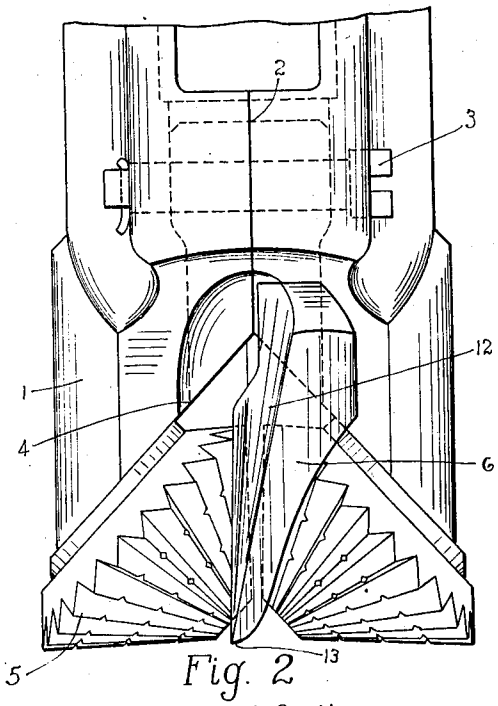

Fig. 2

Floyd L. Scott
J. H. Bettis
Inventors

By Jesse R. Stone

Attorney

Patented Aug. 30, 1932 1,874,066

UNITED STATES PATENT OFFICE

FLOYD L. SCOTT AND IRVIN H. BETTIS, OF HOUSTON, TEXAS

COMBINATION ROLLING AND SCRAPING CUTTER DRILL

Application filed April 28, 1930. Serial No. 447,851.

Our invention relates to cutters for earth boring drills.

In drilling deep wells for oil, gas, sulphur and the like, it is almost impossible to construct a drill having cutters thereon which are well adapted for drilling both soft and hard formations. The best type of cutter for soft formations is the scraping cutter, while the most effective drill for hard formations is a rolling cutter having teeth which penetrate and chip the rock and disintegrate it so that it may be washed to the surface by the flushing fluid. There are formations, particularly formations which are gummy and plastic, in which rolling cutters simply make depressions or tracks in the material but do not cause it to chip or crumble so that it may be carried away by the flushing fluid.

In the formations of this character where the material is not broken up by the rolling cutters, it is found that the opposite rolling cutters make depressions in the bottom of the hole, and the material forms waves or is bulged up in front of the cutters as they travel around on the bottom of the hole. Little progress is made in this type of formation, and as a rule the bit has to be withdrawn, and a scraping cutter substituted for the rolling cutters.

It is an object of our invention to provide an earth boring drill having thereon both scraping and rolling cutters, whereby all types of formation may be cut by the drill without the necessity of withdrawing the bit from the hole until it becomes necessary to do so due to the dulling of the cutters.

A further object is to provide a cutting blade which may be employed with the bits having rolling cutters thereon of ordinary structure. It is also desired to provide a cutting blade to be used with rolling cutters and in which the blade may be easily held in place and removed when desired.

It is also an object to provide a cutting blade so formed as to interfit in the desired position between rolling cutters such as are now used and to move the material cut thereby upwardly away from the rolling cutters, thus allowing rolling cutters to drill upon uncut surface.

We also desire to mount the cutting blade so as not to project materially in advance of the rolling cutters but to place the same so that the blade will engage the material bulging up between the rolling cutters.

In the drawing herewith Fig. 1 is a side view of a cutting blade embodying our invention, said blade being shown in position in a longitudinally divided drill head with one side of the head removed.

Fig. 2 is a side elevation of a drill bit having our invention thereon, said view being taken at right angles to the view shown in Fig. 1.

Fig. 3 is a top plan view of the cutting blade, the rolling cutters and the wall of the hole being shown diagrammatically.

Fig. 4 is a view intended to illustrate the operation of the cutting blade relative to the rolling cutters.

We contemplate employing a cutting blade in connection with rolling cutters of different structure, but preferably with the type of bit known as the cone bit where the cutters are approximately conical in shape. With reference particularly to Fig. 2, the lower end of the drill bit head 1 is shown, said head being divided along the plane indicated at 2. The two parts of the head are held together particularly by means of thru-bolts 3, one on each side of the center of the head. The lower end of the head is formed with diverging faces 4, forming a slot or recess of inverted V shape. On the diverging faces 4 are mounted the two rolling cutters 5. This structure is well known in the art and need not be further described.

The two rolling cutters 5 are spaced apart to allow free rolling motion of the two cutters. We employ a scraping blade 6 adapted to be mounted in the head and between the two sides of the head thereof as shown in the drawing. The blade 6 may be the full diameter of the hole, although it is preferably slightly less in width than the diameter of the hole as is indicated in Fig. 3. The upper end of the blade is formed with a neck 7, and the head is recessed at 8 to receive this neck or shank. Adjacent the upper end of the neck is formed a half round circum-

ferential groove 9 into which the thru-bolts 3 may be engaged to hold the blade securely in position. The lower side of the blade is formed with an opening or recess indicated generally at 10. The shape of this recess is curved and is widened slightly away from the lower end to fit between the adjacent cutters but to avoid contact therewith. On the advancing side of the blade, the margin of the opening 10 is beveled forwardly and outwardly at 11 to form a deflecting surface which tends to move the material cut by the blade upwardly and away from the rolling cutters.

As will be seen from Fig. 2, the forward face of the blade is also extended rearwardly and upwardly at 12 to assist in carrying the material up away from the lower edge. The rearward side is curved forwardly toward the lower end to provide a cutting edge 13.

The shank 7 of the blade is tubular and of sufficient size to fit about the lower end of the water tube 14, which conducts the flushing fluid. Below the end of said tube, the interior of said shank is widened slightly and flattened to allow the fluid to issue at the upper end of the opening 10 of the blade. We have widened the outer ends of the discharge opening as shown at 15, said enlarged openings being connected by a slot 16. The flushing fluid is thereby discharged between the rolling cutters and downwardly against the forward edges of the cutting blades.

As will be seen from Fig. 3, the blade is set at a slight angle from the division plane 2 between the halves of the head. This is to provide for the inclination necessary for moving the material upwardly away from the cutting edges of the blade. The upper shoulder 17 of the blade is received between the lower ends of the head in such manner as to form a wedging fit therewith to assist in holding the blade rigidly in position.

In the operation of the drill thus construced, the cutting blade will act in ordinarily hard formations to scrape up the material disintegrated by the rolling cutters; but in soft and gummy formations, the two sides of the cutting blade will in the rotation of the head precede the rolling cutters, and the material which is bulged up in front of said cutters will be engaged by the blade end which will act to scrape off this material between the cutters and move it upwardly out of the way as shown in Fig. 4, where the flushing fluid may carry it to the surface. Each rolling cutter will therefore move on to an uncut surface such as is indicated at 18 and be allowed to engage therewith to mash it up, loosening it from the cohering material below as the cutter passes over the surface left by the blade. The formation engaged by the cutting teeth will be extruded upwardly behind the cutter as shown at 19 in Fig. 4 in such manner that the cutting blade following will engage therewith and scrape off a cutting in the manner shown. Even where the material is not so plastic, and the rolling cutters merely form deep indentations in the formations, the ridges between said indentations will be engaged by the blade and move upwardly away from the bottom.

It is to be noted that the best results are obtained when the cutting blade is slightly to the rear of the forward sides of the rolling cutters, but while this is a preferred position for the cutters we do not wish to be confined to this positioning thereof; but it is obvious that the cutting blade should not extend materially in advance of the rolling cutters if satisfactory results are to be obtained.

The advantages of this construction lie in the fact that the combination of cutters adapts the drill for use in all kinds of formations, and in some formations in particular, the combination of rolling and scraping cutters allows the drill to cut more rapidly than either rolling cutters alone or scraping cutters alone could operate. Also while we have shown one integral cutting blade, it is to be understood that this scraping cutter could be made in more than one piece to position the scraping edges at the desired positions.

What we claim as new is:

1. A rotary earth boring drill, including a head, opposed rolling cutters thereon, a scraping blade adapted to fit between said cutters, a shank on said blade to fit within said head, said shank having a central water course therethrough.

2. A rotary earth-boring drill, including a head longitudinally divided into two sections, roller cutters on said head, a scraping blade between said cutters, a shank on said blade fitting within a recess in said head, a circumferential groove on said shank, and thru-bolts extending through said head and into said groove to secure said sections and said blade in operative position.

3. A rotary earth-boring drill, including a head longitudinally divided into two sections, roller cutters on said head, a scraping blade between said cutters, a shank on said blade fitting within a recess in said head, a circumferential groove on said shank, and thru-bolts extending through said head and into said groove to secure said sections and said blade in operative position, said shank having a central water course therein.

In testimony whereof, we hereunto affix our signatures, this the 2nd day of April, A. D., 1930.

FLOYD L. SCOTT.
IRVIN H. BETTIS.