June 21, 1932. S. J. FINN 1,863,900

FOXING CEMENTING MACHINE

Filed Sept. 26, 1929 4 Sheets-Sheet 1

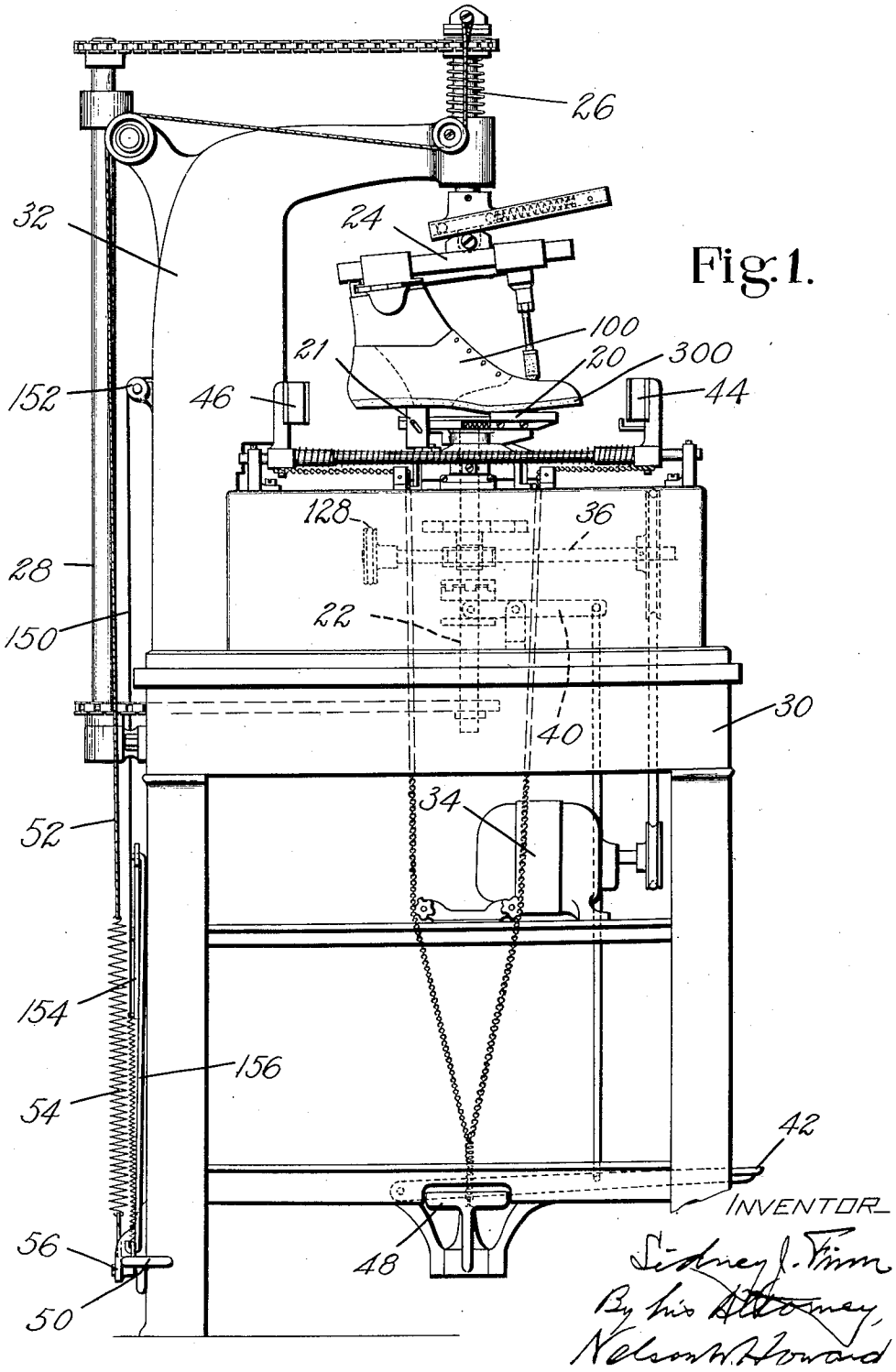

Fig. 1.

June 21, 1932. S. J. FINN 1,863,900

FOXING CEMENTING MACHINE

Filed Sept. 26, 1929 4 Sheets-Sheet 2

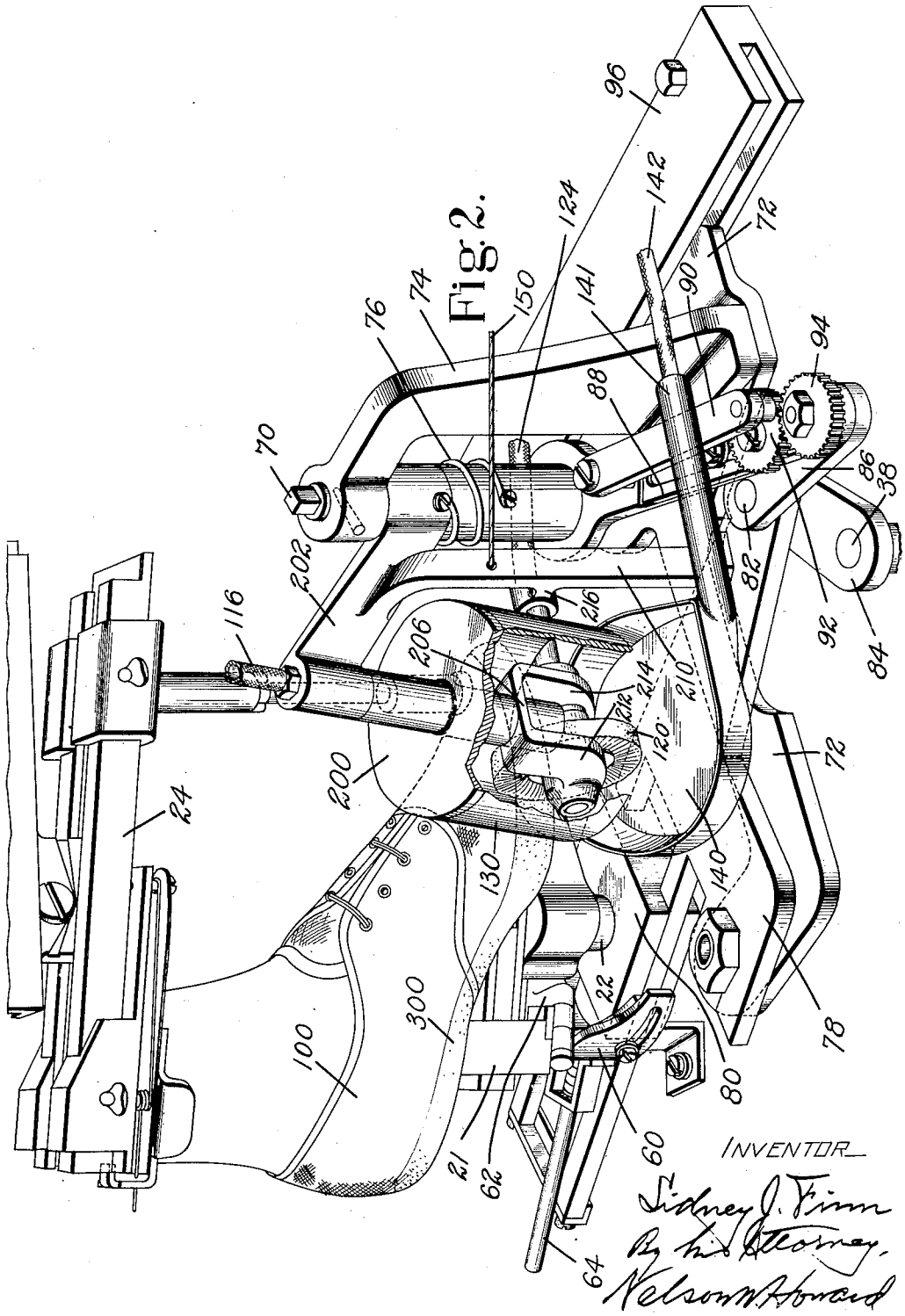

June 21, 1932. S. J. FINN 1,863,900

FOXING CEMENTING MACHINE

Filed Sept. 26, 1929 4 Sheets-Sheet 3

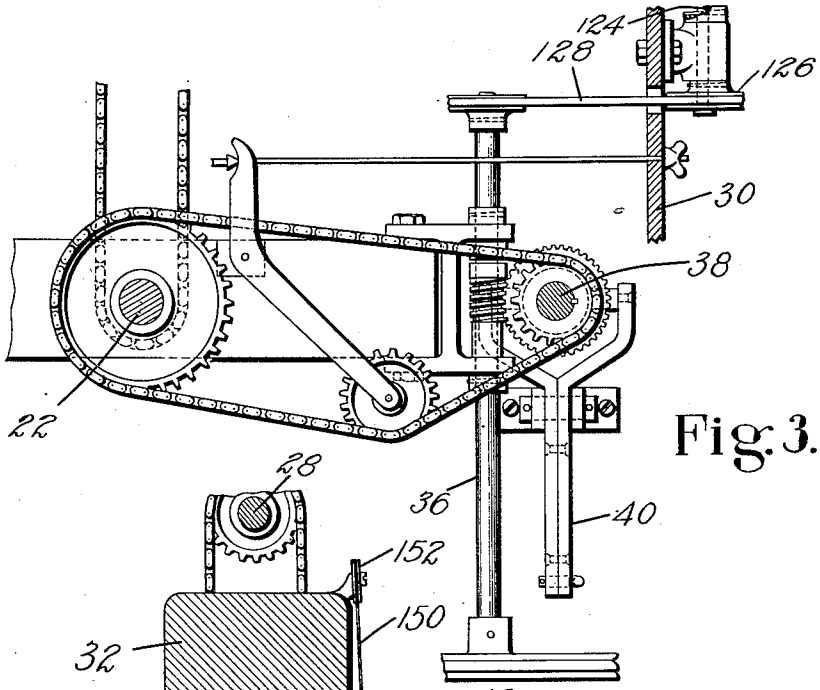

Fig. 3.

Fig. 4.

INVENTOR

Sidney J. Finn

By his Attorney

Nelson W. Howard

June 21, 1932. S. J. FINN 1,863,900

FOXING CEMENTING MACHINE

Filed Sept. 26, 1929 4 Sheets-Sheet 4

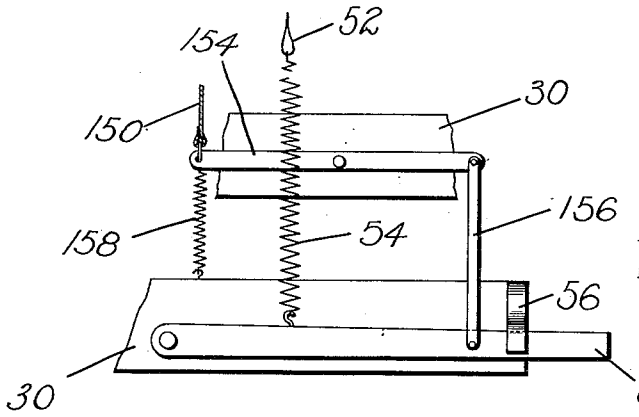

Fig.5.

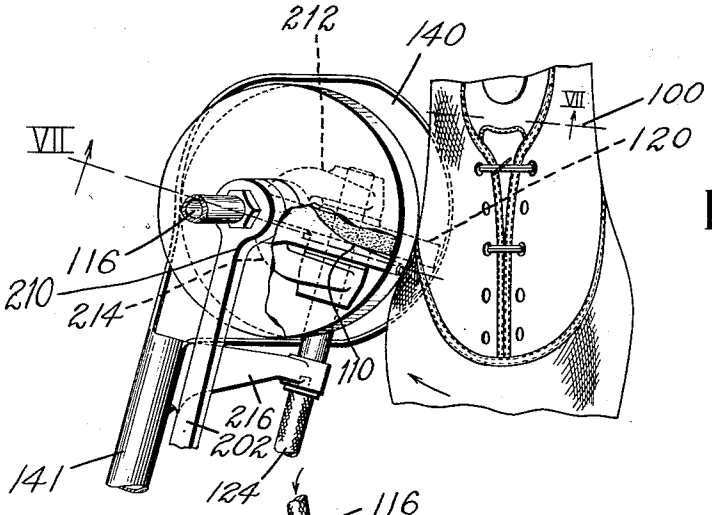

Fig.6.

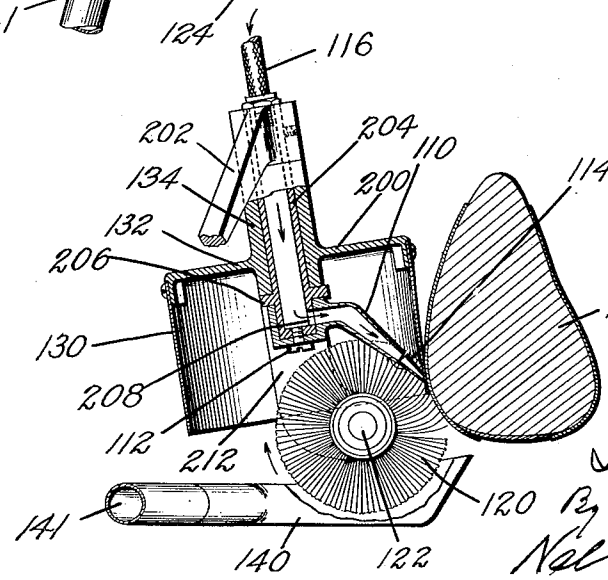

Fig.7.

INVENTOR

Sidney J. Finn

By his Attorney,

Nelson M. Arnold

Patented June 21, 1932 1,863,900

UNITED STATES PATENT OFFICE

SIDNEY J. FINN, OF BEVERLY, MASSACHUSETTS, ASSIGNOR TO UNITED SHOE MACHINERY CORPORATION, OF PATERSON, NEW JERSEY, A CORPORATION OF NEW JERSEY

FOXING CEMENTING MACHINE

Application filed September 26, 1929. Serial No. 395,345.

This invention relates to foxing cementing machines and is illustrated as embodied in a machine for applying cement to the foxing areas of shoes.

In the manufacture of rubber soled tennis shoes, for example, it is customary to secure the edge of the sole firmly to the shoe by vulcanizing it to a strip of gum rubber, known as the foxing, which is applied to the lower margin of the canvas upper by means of cement, the operation of applying this stripe of cement around the lower margin of the shoe, known as foxing cementing, having been heretofore generally performed by hand. For the production of a good grade of work it is important that the cement shall be evenly applied in a rather heavy coating because of the porous nature of the material to be coated and it is also important that the upper edge of the coated area shall have a substantially uniform, predetermined relation to the shoe heightwise of the shoe. If the cement coating extends too high it will be exposed above the foxing strip in the completed shoe and will constitute a blemish lowering the value of the shoe, while, on the other hand, if it does not extend high enough the upper edge of the foxing strip may not be adequately secured to the shoe and may gap and be likely to be pulled away in the use of the shoe.

In view of the foregoing, an object of the present invention is to provide an improved foxing-cementing machine adapted to apply a relatively heavy coating of cement to the desired area uniformly, accurately and rapidly, in order that, by the use of the machine, better work may be produced at less cost than is possible when the foxing-cementing operation is performed by hand.

In view of the foregoing, in order to insure that the upper edge of the cemented area will be properly located and defined heightwise of the shoe to provide a substantially uniform stripe of coating, and in accordance with an important feature of the invention, the illustrated foxing-cementing machine is provided with a novel shielding device, illustrated as an annular shield, the lower end of which is adapted to be positioned exactly at the upper edge of the foxing area and to be rolled along the shoe upon relative movement between the shoe and the shield, the shield being always maintained at the desired level heightwise of the shoe. Preferably and as illustrated, the shield is a bell-shaped resilient member freely rotatable and pressed against the shoe with sufficient force so that the successive portions of the shield are progressively flexed and have consequently an extended line of contact with the shoe, thereby most effectively shielding the foxing area.

Another feature of the invention resides in improved mechanism for applying cement to the area to be coated. In the illustrated construction, in accordance with this feature of the invention, the cement is flowed on the foxing area by being poured from a tube within the rotatable shield and constructed and arranged to conduct the cement to the inner side of the shield, from which the cement flows on the shoe. As illustrated also, a receptacle is provided for collecting the surplus cement, the receptacle underlying the shoe substantially at the point of application of the cement.

In order to insure even distribution of the cement over the foxing area, in accordance with another feature of the invention, the illustrated cement-applying mechanism comprises a member wiping across the exposed edge of the shield and the foxing area of the shoe. In the illustrated embodiment of the invention, a rotary brush is provided for this purpose, the brush being mounted within the annular shield and being driven during the coating of the shoe to cause it to wipe out the cement already flowed on the shoe. The brush is not only effective to wipe out the cement along those parts of the foxing area which are relatively straight heightwise of

the shoe, but is well adapted to spread cement uniformly, for example, in the shank of the shoe where the portions of the upper to be coated slope more or less sharply. The illustrated brush is arranged to dip in the receptacle above mentioned, in consequence of which the brush not only wipes out the cement which has been poured on the foxing area, but itself takes up cement from the receptacle and applies it to the shoe. Thus the brush cooperates with the cement-pouring tube to insure the uniform application of the desired heavy coating and is further advantageous in that the brush will apply cement even if there is an interruption in the flow of cement from the tube.

Preferably and as herein illustrated, the machine is organized to coat successive portions of the foxing area progressively through relative movement of the cement-applying mechanism and the shoe, the illustrated machine being of the type in which the shoe is carried by work-supporting means operated to rotate the shoe relatively to the cement-applying mechanism in such a manner as to transfer the point of operation of the cement-applying tube progressively around the shoe. In order that the cement-applying instrumentalities may be maintained in substantially uniform angular relation to the peripheral contour of the foxing area during the relative movement of the shoe and the cement-applying mechanism, the illustrated cement-applying instrumentalities are mounted upon a swinging arm movable about a pivot shifted in a predetermined path designed to maintain the desired angular relation between the cement-applying instrumentalities and the shoe, the swinging arm being pressed against the shoe to cause the cement-applying instrumentalities to move in directions toward or from the shoe in accordance with variations in the peripheral contour of the foxing area.

These and other features of the invention are described in detail in the following specification taken in connection with the accompanying drawings, in which

Fig. 1 is a side elevation of the machine with the cement applying tool omitted for the sake of clearness;

Fig. 2 is an angular view of the operating parts of the machine showing the shoe in tilted position as cement is applied along the forepart of the shoe;

Fig. 3 is a plan view, partly in section, of some of the operating mechanism by means of which the shoe is rotated;

Fig. 4 is a plan view of the shoe support and the cement applying mechanism with the upper shoe clamp removed;

Fig. 5 is a detail view showing part of the treadle connections;

Fig. 6 is a plan view of the cement applying tool in operative relation to the shank portion of a shoe; and

Fig. 7 is a vertical section on the line VII—VII of Fig. 6.

The present machine embodies to a large extent a shoe turning mechanism and a mechanism for presenting an operating tool to the shoe which has previously been shown and described in my application No. 216,399, filed August 30, 1927, for improvements in foxing applying machines, and reference may be had to that application for the description in greater detail of parts of the mechanism not fully described herein. Before proceeding to a description of the various parts of the machine, the general scheme of operation will be briefly described showing that the machine embodies mechanism by means of which relative movement is produced between a lasted tennis shoe 100 (Fig. 2) and a cement applying tool 200 so that cement is applied progressively to all portions of that part of the shoe known as the foxing area 300 which extends around the lower margin of the shoe and to which a strip of gum rubber known as the foxing is to be applied to assist in the attachment of the rubber sole to the canvas upper. The particular machine herein illustrated is arranged to rotate the shoe about a substantially fixed axis and to tilt it during this rotation so that the cement applying tool 200, mounted on a swinging arm 202 and resiliently urged toward the shoe, will operate in predetermined relation to the shoe to apply cement within exactly the desired limits in spite of the curvature of the bottom of the shoe.

The shoe 100 rests upon a shoe support 20 carried at the upper end of a vertical shaft 22 and is held upon this support (not rigidly but so that it may tilt from front to back and rock from side to side) by an upper clamp 24 carried at the lower end of a rotatable shaft 26, these shafts 22 and 26 being connected through a counter shaft 28 for rotation together. Bearings for the shaft 22 are provided in a machine frame 30 which comprises an upwardly extending arm 32 furnishing a bearing for the upper shaft 26. Power for the rotation of the shoe may be supplied from a driving motor 34 connected through a jack shaft 36 to a vertical shaft 38, the supply of power to the shaft being controlled by means of a clutch having a lever 40 connected to a treadle 42 at the base of the machine. When the operator depresses the treadle 42, power will be supplied to operate the shaft 38, and by means of a suitable connection to cause a rotation of the shoe which will be continued so long as the treadle is kept depressed and, as will be understood, sufficiently long to insure the complete rotation of the shoe.

In order that the shoe may be readily mounted upon its support and centered with respect to the rotating shafts 22 and 26, the

machine is provided with centering devices 44 and 46 connected to an operating treadle 48, said devices being normally held apart by springs. Thus, while the operator steadies the shoe on the lower support, the upper clamp having been raised by a spring surrounding the shaft 26, the shoe may be centered with respect to said lower support 20 by depressing the treadle 48 and drawing in the devices 44 and 46. The upper clamp 24 is then brought down against the tension of its spring into clamping relation with the top of the shoe and the top of the last by means of a treadle 50 connected through a cord 52 and a spring 54 to the upper shaft 26, after which the treadle 48 is released. A lug 56 (Figs. 1 and 5) is provided, to engage the treadle 50, so that the treadle 50, once depressed, may be held in lowered position to hold the shoe resiliently clamped upon the shoe support 20.

It has already been brought out that, with the cement applying tool at a fixed level as it swings on its arm 202, it will be necessary, due to the longitudinal curvature of the bottom of the shoe, to produce at the proper times relative movement between the shoe and the cement applying member heightwise of the shoe. This is accomplished in the illustrated machine by rocking or tilting the shoe. When the machine is coating the rear part of the shoe, that is from the heel end to approximately the ball line, the shoe may remain in the position shown in Fig. 1, but when the forepart is reached the shoe must be rocked or tilted forward into the position shown in Fig. 1, but when the forepart is reached the shoe must be rocked or tilted forward into the position shown in Fig. 2 and remain in that position while cement is being applied around the forepart. For this purpose a shoe supporting part 21 beneath the heel end of the shoe and forming a portion of the shoe support 20 is arranged to be lifted by means of a cam 60 (Figs. 2 and 4) acting through a tilting lever 62, a portion of which is arranged to underlie the shoe supporting part 21. This cam 60 is operative then during a part of the revolution of the shoe to rock the shoe forward from a position shown in Fig. 1 to that shown in Fig. 2. When the shoe passes beyond the action of the cam it is rocked back into the position shown in Fig. 1. In order that the machine may be utilized for both right and left shoes the cam is made as a double cam described in my prior application referred to above and may be changed from a cam for right shoes to one for left shoes by a handle 64. During this tilting of the shoe it will rock upon an axis substantially at its ball line and provision is made in the upper clamping mechanism 24 to allow the lateral rocking movement which accompanies such tilting movement.

If the cement applying tool 200 were mounted on its arm 202 to swing freely about a fixed pivot, it is clear that the relation of the tool to the shoe would vary at different parts of the shoe because of the change in angular relation of the arm 202 with respect to the shoe, and the operating elements of the cement applying tool, to be described, will not be at the point of contact between the rolling shield 130 and the shoe. As herein arranged, however, this change in angular relation is offset by compensating mechanism which shifts an upright spindle 70 upon which the arm 202 is pivoted so as to maintain the desired relation. The spindle 70 is supported at its lower end upon a movable plate 72 and held upright by means of a brace 74 carried by an extension of that plate. A spring 76 (Fig. 2) is arranged to swing the arm 202 around the upright spindle 70 so as to hold the cementing tool 200 in contact with the shoe. For the purpose of maintaining the spindle 70 in such a position that the desired relation between the tool and the work may be maintained, mechanism is provided for shifting the position of the plate 72 as the shoe is rotated. To this end the right-hand end of the plate 72 is slidably supported in a guide 96 fastened to the frame of the machine and the left-hand end of the plate 72 (Fig. 2) is pivoted to an arm 78. This arm 78 is forked at one end and slidably engages a block 80 surrounding the shaft 22 of the upper support and is pivoted to a stud 82 at its other end, said stud being carried upon a crank 84 mounted on the upper end of the shaft 38. The position of the sliding end of the plate 72 is determined by an extensible link 88 joined to the outer end of a rigid extension 86 on the crank 84, the other end of said extensible link 88 being pivotally connected with the spindle 70 on the plate 72. The length of this link 88 is controlled by means of a pitman 90 operated by a gear 92 rolling upon a gear 94 fixed in position at the end of the crank arm 86.

Provision is thus made for continually adjusting the position of the plate 72 to keep the cement applying tool in the most advantageous relation to the work and with respect to its supporting spindle 70, and the net result of the mechanism described is to move the spindle 70 in a path like a very much elongated figure 8, the long axis of which is substantially perpendicular to the longitudinal axis of the shoe in the position shown in Fig. 4. The movement of the spindle 70 is accelerated at the curves at the top and bottom of the figure 8 in order to accelerate the forward movement of the carrier for the cement applying mechanism as the latter passes around the toe end and again to accelerate its movement as it passes around the heel end of the shoe. The relation of the driving parts shown in Fig. 3 is such that the shaft 38 rotates twice for each rotation of the shoe and consequently the link 88 is extended

twice during that period, these extensions being timed to take place respectively when the cement is being applied around the heel end and around the toe end of the shoe.

From the description already given, it will be understood that the machine provides means for rotating a shoe about an upright axis to carry the various portions of its foxing area past a cement applying mechanism resiliently held against the shoe and maintained always in the desired relation to the shoe to perform the most effective operation. At the same time, the shoe is tilted to lift the heel end of the shoe so as to bring the forepart of the shoe down to the level of the cement applying apparatus and to maintain the line of contact at just the desired upper margin of the foxing area. In order that this mechanism may be most effective for the application of cement to the foxing area of the shoe, I have provided a novel cement applying mechanism by means of which an adequate quantity of cement will be applied to all parts of the foxing area during the progressive cementing operation and will be thoroughly brushed out so as to distribute the cement evenly. But what is still more important, the cement will be exactly limited to the foxing area so that the upper margin of the band of cement will exactly coincide with said area and not extend above or gap below the point where the rubber foxing will be applied. To this end the cement is flowed through a cement-supplying nozzle 110 (Fig. 7) on to the foxing area of the shoe and substantially simultaneously is thoroughly brushed out by means of a rotary brush 120 moving down across the foxing area, the upper margin of the band being automatically limited by means of a bell-shaped shield 130 rolling along the shoe as relative movement is produced between the shoe and the cement applying apparatus.

The details of construction of this apparatus are best shown in Figs. 2, 6 and 7. From these figures it will be seen that the arm 202 carries at its outer end a hollow support comprising a depending tube 204 closed at its lower end and provided with a shoulder 206. Secured to the lower end of this tube below the shoulder 206 and connected thereto by means of an aperture 208 is the nozzle 110, said nozzle having a cup-like portion which fits over the lower end of the sleeve and is held on it by a screw 112. The lower end 114 of the nozzle 110 is hinged to allow some flexibility for a reason which will appear later, said hinged portion being spring pressed against the inner side of the bell-shaped shield 130. It will be clear from Fig. 7 that the bell-shaped shield 130 is supported at its upper margin upon a rigid hub 132 having a sleeve-like portion 134 which is journaled on the tube 204 above the shoulder 206. The cylindrical bell-like shield 130 itself will preferably be made of resilient sheet metal, such as sheet steel, so that the shield will tend to conform to the curvature of the shoe against which it is pressed, especially at the convexed toe and heel portions thereof.

It will be understood from the description already given that cement supplied through a flexible pipe 116 from a receptacle 118 will flow by gravity down through the tube 204 and out through the nozzle 110 on to the inner surface of the shield and thence on to the foxing area of the shoe, being prevented from coating any portion of the shoe above the foxing area by the action of the flexible shield which is flexed under the pressure of the spring 76 to elongate the line of contact between the shield and the shoe. Any surplus cement will be caught in a receptacle 140 suspended in any suitable manner, as for example by means of an arm 210 depending from the arm 202, to underlie the point of application of cement to the shoe. By reason of its support, the receptacle and shoe will have relative movement as cement is applied progressively along the foxing area. Surplus cement may be allowed to drain out of this receptacle through an outlet 141 and thence through a flexible pipe 142 into any desired container (not shown).

At the same time, the even and perfect application of cement to the foxing area is assured by the action of the driven brush 120 rotating about a substantially horizontal axis in journals provided by depending arms 212 and 214 integral with the enlargement provided by the shoulder 206 of the supporting tube 204. The relation of the axis of the brush to the axis of the shield is thus maintained substantially constant and the shaft 122 on which the brush is mounted may be guided by a boss 216 on the depending arm 210 and connected thence to a flexible shaft 124, the other end of the shaft being secured to a pulley 126 (Fig. 4) journaled on the side of the frame 30 and connected by a belt 128 (Fig. 3) to the drive shaft 36.

For greater convenience in the operation of the machine, the cement applying tool 200 is arranged to be automatically withdrawn from the shoe when the upper clamp 24 is released preparatory to removing the shoe from the machine. Conversely, the cement applying tool is automatically moved into operative position in contact with the shoe when a new shoe is clamped in place in the machine. To this end a cord 150 (Fig. 4) fastened at its upper end to the depending arm 210 (Fig. 2) of the cement applying apparatus leads over a pulley 152 (Figs. 1 and 4) on the upright 32 of the machine frame and down to one end of a lever 154 (Figs. 1 and 5). This lever is pivoted between its ends to the frame of the machine and its outer end is connected by a link 156 with the treadle 50.

A tension spring 158 joins the inner end of the lever 154 with the frame of the machine. The arrangement is such that when the treadle 50 is depressed and held down by the lug 56, as shown in Figs. 1 and 5, the cord 150 is slackened and the cement applying member 200 is held against the shoe by the spring 76 wound around the spindle 70. When the operation is completed, however, the treadle 50 is released from the lug 56 and pulled up by the springs 54 and 158, thereby rocking the lever 154 (in a counter-clockwise direction as viewed in Fig. 5) to pull the cord 150 down and thereby to swing the carrier 202 (Fig. 2) of the cement applying mechanism away from the shoe.

In the operation of the machine, the operator will prepare the machine for work on a particular shoe by setting the handle 64 on the shoe tilting cams 60 for a right or left shoe and, placing the shoe upon the support 20, he will depress the treadle 48 to bring the centering devices 44 and 46 into engagement with the ends of the shoe. Then, still holding the treadle 48 depressed, he will release the treadle 50 to allow the upper clamp 24 to be resiliently depressed against the top of the shoe and the upper end of the last. The treadle 48 is then released, allowing the centering devices 44 and 46 to be spring pressed out of the way of the shoe. The machine is then set in motion by depressing the treadle 42 so as to rotate the shafts 22 and 38 to turn the shoe so as to present all parts of the foxing area to the cement applying mechanism 200 and at the same time to control the position of the spindle supporting plate 72 so as to hold the cement applying mechanism in such a relation to the shoe that the cement spout 110 and the brush 120 are at the point of contact between the bell-shaped shield 130 and the shoe. It will be understood that the pressure applied by the spring 76 to hold the cement applying apparatus 200 against the shoe is sufficient, slightly to distort the bell-shaped shield 130 at all points on the shoe and more especially at the toe and heel ends of the shoe so as to provide a sufficiently wide contact between the lower edge of said shield and the shoe adjacent to the upper edge of the foxing area to insure complete protection for the shoe above the foxing area. By flowing the cement on to the inner surface of this shield and thence on to the foxing area of the shoe, the whole action of the machine and of gravity is to carry the cement across the foxing area away from its upper edge. This action of gravity is assisted by the action of the driven brush 120 wiping downwardly across the lower edge of the shield and the foxing area, especially at those undercut portions of the shoe such as are found at the shank (Fig. 7). The brush 120 will be additionally effective in carrying the cement well under the shoe so as to coat the whole width of the foxing area, and at all parts of the shoe the brush will assist in insuring an even distribution of cement.

Having thus described my invention, what I claim as new and desire to secure by Letters Patent of the United States is:

1. In a machine for applying cement to the foxing area of a shoe, means for supporting a shoe with its bottom facing downwardly, a movable annular shield having an upright wall and supported with one edge exposed and adapted to be brought into contact with the shoe on said supporting means at the upper edge of the foxing area, and a cement-applying device arranged to wipe down across the upright wall and the exposed edge of the shield at a considerable angle to the edge thereof and the foxing area of the shoe whereby as relative movement is produced between the cement-applying device and the shoe, all parts of the foxing area will be coated.

2. In a machine for applying cement to the foxing area of a shoe, means for positioning the shoe, applying means movable transversely of the length of the foxing area of the shoe to coat a limited portion thereof, a shielding member interposed between the applying means and the shoe in such a relation to the shoe that an edge of the shielding member will coincide with the upper edge of the foxing area, thereby to determine the extent of the foxing area to be coated, and means for producing relative movement of translation between the shoe and the applying means at about the level of the bottom of the shoe, thereby to transfer the point of operation of the applying member in the foxing area around the periphery of the shoe.

3. In a foxing cementing machine an annular shielding member, a shoe support, a cement-applying mechanism within said annular shield, means for producing relative movement between a shoe on said support and the cement-applying means, said shielding member and said means being relativly constructed and arranged to cause a rolling contact between the shoe and the shielding member to be produced by said relative movement with the lower edge of the shielding member coinciding with the upper edge of the foxing area, thereby to determine the extent of the coating heightwise of the shoe.

4. In a foxing cementing machine, a work support, an anular rotatable shield having an upright wall terminating in a thin lower edge, and means for supplying an excess of cement to the inner surface of said annular shield, whereby as said shoe is moved with respect to said annular shield with the lower edge of the shield rolling along the upper of the shoe in coincidence with the upper edge of the foxing area, the cement supplied to the inner surface of the shield will flow from the wall of the shield down over the foxing area.

5. In a foxing cementing machine, a bell-shaped shield having its lower edge exposed for the presentation of a shoe with the upper edge of the foxing area coinciding with the lower edge of the shield, said shield being rotatably mounted about an upright axis, a shoe support, means for producing relative traversing movement between said shield and said support and means for flowing cement on to the inner surface of the shield above the point of contact between the shield and the shoe, whereby the cement will flow on to the foxing area and the extent of the area to be coated will be determined by the relative engagement between the shield and the shoe.

6. In a foxing cementing machine, a bell-shaped shield having an upright wall with its lower edge exposed for the presentation of a shoe with the upper edge of the foxing area coinciding with the lower edge of the shield, said shield being rotatably mounted about an upright axis, means for flowing cement on to the inner surface of the upright wall of the shield above the point of contact between the shield and the shoe, whereby the cement will flow on to the foxing area and the extent of the area to be coated will be determined by the relative engagement between the shield and the shoe, and rotary means to spread the cement over the foxing area.

7. In a foxing cementing machine, means for supporting a shoe with its bottom facing downwardly, a curved shield positioned above the bottom of a shoe thereon in contact with the shoe in such a relation that its lower edge lies substantially at the upper edge of the foxing area, means for producing relative traversing movement between said shield and supporting means while maintaining said relation whereby the lower edge of the shield will travel along the upper edge of the foxing area, and means to apply cement to the exposed foxing area adjacent to said shield.

8. In a foxing cementing machine, means for supporting a shoe with its bottom facing downwardly, means for supporting a shield in predetermined relation to said shoe such that its lower edge contacts with the shoe substantially at the upper edge of the foxing area, means for producing relative traversing movement between said supporting means whereby the contacting edge of the shield will travel along the shoe at the upper edge of the foxing area, and means to pour cement onto the exposed foxing area beneath said shield thereby to produce a stripe of cement around the shoe of substantially uniform width and located in predetermined relation to the bottom of the shoe.

9. In a foxing cementing machine, cement-applying means comprising a shield, means for pouring cement on a shoe adjacent to and below the lower edge of the shield, and means for supporting a shoe for traversing movement constructed and arranged to carry the shoe past said cement applying means and to hold the shoe in contact with the shield with the lower edge of the shield traveling along the upper edge of the foxing area.

10. In a foxing cementing machine, a work support adapted to hold a shoe in substantially upright position, an annular shield rotatable about an upright axis having its lower edge in a plane above the work support, said lower edge being exposed for rolling contact with the upper edge of the foxing area of a shoe on the work support, a brush rotatable within said shield about an axis substantially at right angles to the axis of rotation of the shield arranged to wipe across the foxing area of the shoe exposed beneath the shield, and means for supplying cement to said rotary brush.

11. In a foxing cementing machine, an annular shield having a thin lower edge adapted to be brought into contact with a lasted shoe at the upper edge of the foxing area to lie substantially flat against the side of the shoe, and cement-applying means within said annular shield for applying cement to the foxing area.

12. In a foxing cementing machine, an annular shield having a lower edge adapted to be brought into contact with a lasted shoe at the upper edge of the foxing area, and a rotatable cement-applying device within said guard arranged to wipe across the lower edge thereof to apply cement to the foxing area of a shoe presented to the guard whereby the guard will define the upper edge of the line of cement applied thereto.

13. In a foxing cementing machine, a rotatable annular guard having a free lower edge, means to supply cement to the inner face thereof, means for rotating said guard, and cement-applying means within the guard rotatable about an axis substantially at right angles to the axis of rotation of the guard constructed and arranged to remove cement from the guard and to apply it to a shoe whereby a shoe may be presented to the applying means with the lower edge of the guard in contact with the shoe at the upper edge of the foxing area and the shoe moved successively to present different portions of the foxing area to the applying means.

14. In a foxing cementing machine, a hollow cylindrical guard rotatably mounted around an upright axis with the forward portion of its lower edge exposed for the application of work thereto so that the lower edge of the guard may be caused to roll along the upper edge of the foxing area of a shoe presented to the machine, and means for applying cement to the exposed foxing area of the shoe below the edge of the guard.

15. In a foxing cementing machine, a rotatable hollow cylindrical guard having a

free lower edge adapted to be rolled along the upper edge of the foxing area of a shoe, and a rotatable cement-applying brush within said guard adapted to wipe across the lower edge of the guard and the foxing area of the shoe thereby to apply a stripe of cement, the upper edge of which will be positioned along a line determined by the rolling contact of the guard and the shoe.

16. In a foxing cementing machine, a hollow cylindrical guard rotatable about an upright axis, a work support adjacent said guard upon which the bottom of a lasted shoe may be rested as the lower edge of the guard is rolled along the upper edge of the foxing area of the shoe, and a rotatable cement-applying brush within said guard rotatable about an axis substantially at right angles to the axis of the guard to wipe across the lower edge of the guard and the foxing area of the shoe to apply a stripe of cement, the upper edge of which is determined by the rolling contact of the guard of the shoe.

17. In a foxing cementing machine, a support for a shoe, a cement-applying tool mounted upon a swinging arm, a pivotal support for said arm, and mechanism for producing relative movement between the cement-applying tool and the shoe support to cause the foxing area of the shoe to be traversed by the tool, said mechanism being constructed and arranged to maintain the pivotal support for the swinging arm of the cement tool at all times in advance of the tool in the direction in which the foxing area is being traversed.

18. In a foxing cementing machine, a holder for a shoe, a cement-applying tool, a pivotal support for the cement-applying tool, means for maintaining the tool in contact with the shoe, means for producing relative movement between the shoe and the tool, and means for moving the pivotal support for the cement-applying tool constructed and arranged to cause the tool to swing toward and away from the shoe and to cause it to maintain the tool in substantially a fixed relation to the shoe during the application of cement to successive parts of the foxing area.

19. In a foxing cementing machine, means for rotating a shoe about an upright axis, a cement-applying tool adapted to apply cement to the foxing area of the shoe including means to protect the shoe above the foxing area, means for supporting said tool comprising a swinging arm, means for resiliently holding the tool in contact with the shoe, a pivotal support for said arm, and means for moving said pivotal support during the rotation of the shoe to maintain it always in advance of the cement applying tool.

20. In a foxing cementing machine, means for rotating a shoe about an upright axis, a cement-applying tool adapted to apply cement to the foxing area of the shoe including means to protect the shoe above the foxing area, means for supporting said tool comprising a swinging arm, means for resiliently holding the tool in contact with the shoe, a pivotal support for said arm, and means for moving said pivotal support during the rotation of the shoe to maintain it always in advance of the cement-applying tool, said means being constructed and arranged to accelerate the movement of the pivotal support during the traverse by the cement-applying tool of the toe and heel portions of the shoe.

21. In a foxing cementing machine, means for rotating a shoe about an upright axis, means for applying cement to the foxing area of the shoe mounted upon a swinging arm and including a cement-applying device supported for rotation about an axis in fixed relation to said arm, means for resiliently holding the tool in engagement with the shoe, and means for shifting the support for said swinging arm, constructed and arranged to maintain the axis of the rotary applying tool in substantially a fixed relation to a tangent to the edge of the shoe at the point of contact.

22. In a foxing cementing machine, a shoe support, a cement-applying tool, means for producing relative movement between the support and the tool to cause the foxing area of a shoe on the support to be traversed by the tool, a bell-shaped shield mounted to roll along the shoe, and means for conducting cement to a point within the shield to pour it upon the foxing area of the shoe at the point of contact between the shield and the shoe.

23. In a foxing cementing machine, a shoe support, a cement-applying tool, means for producing relative movement between the support and the tool to cause the foxing area of a shoe on the support to be traversed by the tool, a bell-shaped shield mounted to roll along the shoe, and means for conducting cement to a point within the shield in position to flow against the inner wall of the shield and thence down over the foxing area of the shoe at the point of contact between the shield and the shoe.

24. In a foxing cementing machine, a shoe support, a cement-applying tool, means for producing relative movement between the support and the tool to cause the foxing area of a shoe on the support to be traversed by the tool, said tool carrying a bell-shaped shield mounted to roll along the shoe, means for flowing cement against the inner wall of the shield, and means for removing cement from the shield and applying it to the exposed foxing area of the shoe just beneath the edge of the shield adjacent to the point of contact between the shield and the shoe.

25. In a foxing cementing machine, a shoe support, a cement-applying tool, means for producing relative movement between the support and the tool to cause the foxing area

of the shoe to be traversed by the tool, said tool including a hollow support, a bell-shaped shield rotatably mounted upon said hollow support, and means for conducting cement through said hollow support and pouring it upon the foxing area of the shoe at the point of contact between the shield and the shoe.

26. In a foxing cementing machine, a shoe support, a cement-applying tool, means for producing relative movement between the support and the tool to cause the foxing area of the shoe to be traversed by the tool, said tool including a hollow support, a bell-shaped flexible shield rotatable upon said hollow support, a flexible nozzle attached to the lower end of the hollow support, and means for supplying cement to flow through the said hollow support and said nozzle for application to the foxing area of the shoe.

27. In a foxing cementing machine, a shoe support, a cement-applying tool, means for producing relative movement between the support and the tool to cause the foxing area of the shoe to be traversed by the tool, said tool including means for flowing cement upon the foxing area of the shoe during the relative traversing movement, and a shield interposed between said flowing means and the shoe thereby to guard the uncoated area of the shoe accurately to define the upper edge of the foxing area.

28. In a foxing cementing machine, a cement-applying tool mounted on a swinging arm, a support for a shoe constructed and arranged to turn the shoe about an approximately upright axis to present all sides of the shoe to the tool, said tool including means for flowing cement upon the foxing area of the shoe, and a shield arranged to contact with the shoe to protect the uncoated area of the shoe and having its edge at the upper edge of the foxing area thereby to define the extent of the coated area.

29. In a foxing cementing machine, a shoe support, a cement-applying tool, means for producing relative movement between the support and the tool to cause the foxing area of the shoe to be traversed by the tool, an arm resiliently urged in one direction to hold the tool in contact with the shoe, said tool including a cement spout located at the end of said arm in fixed relation thereto, a shield overlying said spout, the marginal portion of which is arranged to contact with the shoe at the upper margin of the foxing area, and means for supporting said arm constructed and arranged to minimize the variations in the angular relation of said arm to a tangent to the shoe at the point of contact during said traversing movement whereby the shielded spout will be kept in effective contact with the shoe.

30. In a foxing cementing machine, a shoe support, a cement-applying tool, means for producing relative movement between the support and the tool to cause the foxing area of the shoe to be traversed by the tool, said tool comprising a shielding device the edge of which contacts with the shoe at the upper margin of the foxing area, means for applying cement to the exposed foxing area beneath the shielding device, a cement receptacle underlying said shielding device, and rotary means dipping in said receptacle lifting cement for application to the foxing area.

31. In a foxing cementing machine, a shoe support, a cement-applying tool, means for producing relative movement between the support and the tool to cause the foxing area of the shoe to be traversed by the tool, said tool comprising a shielding device the edge of which contacts with the shoe at the upper margin of the foxing area, a cement receptacle underlying said shielding device, and rotary means dipping in said receptacle lifting cement for application to the foxing area, said rotary means comprising a brush wiping across the edge of the shield and the foxing area of the shoe.

32. In a foxing cementing machine, a shoe support, a cement-applying tool, means for producing relative movement between the support and the tool to cause the foxing area of the shoe to be traversed by the tool, said tool comprising a shield arranged with its lower edge in contact with the shoe at the upper edge of the foxing area, a spout for directing cement onto the foxing area of the shoe adjacent to said shield, a cement receptacle below said applying tool, and rotary means dipping in said receptacle and lifting cement for application to the shoe.

33. In a foxing cementing machine, means for rotating a shoe about an upright axis, a cement-applying tool, a swinging arm supporting said tool in contact with the shoe, said tool comprising a cement-supplying member, a receptacle, a driven member associated therewith, a flexible connection to said supplying member to conduct cement thereto, and a flexible drive shaft for said driven member.

34. In a foxing cementing machine, means for rotating a shoe about an upright axis, a cement-applying tool, a swinging arm supporting said tool in contact with the shoe, said tool comprising a cement-supplying member, a receptacle, a driven member associated therewith, a flexible connection to said supplying member to conduct cement thereto, and a flexible drive shaft for said driven member, said receptacle being provided with a flexible overflow pipe.

35. In a foxing cementing machine, means for rotating a shoe about an upright axis, a cement-applying tool, a swinging arm supporting said tool in contact with the shoe, a receptacle supported by said arm, said tool comprising driven means for picking up

cement from the receptacle for application to the shoe, and a flexible drive shaft for said driven means.

36. In a foxing cementing machine, a shoe support, a cement-applying tool, means for producing relative movement between the support and the tool to cause the foxing area of the shoe to be traversed by the tool, an arm resiliently urged in one direction to hold the tool in contact with the shoe, said tool including means for applying cement to the foxing area, and a flexible curved shielding member adapted to be distorted upon contact with the shoe so as to extend the length of that portion of the lower edge of the shield which is in contact with the shoe.

37. In a foxing cementing machine, a shoe support, a cement-applying tool, means for producing relative movement between the support and the tool to cause the foxing area of the shoe to be traversed by the tool, an arm resiliently urged in one direction to hold the tool in contact with the shoe, a curved flexible shield the lower edge of which contacts with the shoe at the upper edge of the foxing area whereby the flexibility of the shield will permit distortion thereof on contact with the shoe to extend the length of the line of contact, and means disposed beneath said shield for applying cement to the foxing area.

38. In a foxing cementing machine, a shoe support, a cement-applying tool, means for producing relative movement between the support and the tool to cause the foxing area of the shoe to be traversed by the tool, an arm resiliently urged in one direction to hold the tool in contact with the shoe, an annular shielding device in rolling contact with the shoe, said shielding device being flexible to allow the resilient pressure applied to the tool carrying arm to distort the edge of the shield to extend the line of contact between the two, and means within the shield for applying cement to the foxing area.

39. In a foxing cementing machine, means for rotating a shoe about an upright axis, a cement-applying tool arranged to apply cement progressively to the successive portions of the foxing area as the shoe is rotated, a receptacle underlying the point of application of cement to the shoe, and movable means for supporting said receptacle to hold it in the desired relation to the tool and the shoe.

40. In a foxing cementing machine, a cement-applying tool, a shoe support, a receptacle underlying a shoe upon the shoe support and the applying tool beneath the point of application of cement to the shoe to catch excess cement, and means for causing relative traversing movement of said tool and said shoe support to cause the application of cement to the sucessive portions of the foxing area around the shoe, said means being constructed and arranged to hold the tool in contact with the shoe.

41. In a foxing cementing machine, a cement-applying tool, a shoe support constructed and arranged to prevent all sides of a shoe to said tool, a receptacle underlying a shoe upon the shoe support and the applying tool beneath the point of application of cement to the shoe to catch excess cement, and means for causing relative traversing movement of said tool and receptacle and said shoe support to cause the application of cement to the successive portions of the foxing area around the shoe.

42. In a foxing cementing machine, a cement-applying tool, a movable shoe support constructed and arranged to present all sides of a shoe to said tool, a receptacle underlying a shoe on the shoe support beneath the point of application of cement to the shoe to catch excess cement, a swinging arm supporting said tool and receptacle, means for swinging said arm to hold the tool in contact with the shoe, and means for moving said shoe support to cause the shoe to move past the tool whereby cement will be supplied to successive portions of the foxing area around the shoe.

43. In a foxing cementing machine, a cement-applying tool, a movable shoe support constructed and arranged to present all sides of a shoe to said tool, a swinging arm for supporting said tool, means for swinging said arm to hold the tool in contact with the shoe, and means for moving said shoe support to cause the shoe to move past the tool whereby cement will be supplied to successive portions of the foxing area around the shoe.

44. In a foxing cementing machine, a cement-applying tool, a movable shoe support constructed and arranged to present all sides of a shoe to said tool, a receptacle underlying a shoe on the shoe support beneath the point of application of cement to the shoe to catch excess cement, a swinging arm for supporting said tool, means for swinging said arm to hold the tool in contact with the shoe, and means for moving said shoe support to cause the shoe to move past the tool whereby cement will be supplied to successive portions of the foxing area around the shoe.

45. In a foxing cementing machine, a cement-applying tool, a movable shoe support constructed and arranged to present all sides of a shoe to said tool, a receptacle underlying a shoe on the shoe support beneath the point of application of cement to the shoe to catch excess cement, means for picking up cement from said receptacle and delivering it to the applying tool, a swinging arm for supporting said tool, means for swinging said arm to hold the tool in contact with the shoe, and means for moving said shoe support to cause the shoe to move past the tool whereby cement will be supplied to successive portions of the foxing area around the shoe.

46. In a foxing cementing machine, a cement-applying tool, a shoe support, a recep-

tacle underlying a shoe upon the shoe support and the applying tool beneath the point of application of cement to the shoe to catch excess cement, means dipping in said receptacle for raising cement from the receptacle to the applying means, and means for causing relative traversing movement of said tool and said shoe support to cause the application of cement to the successive portions of the foxing area around the shoe.

In testimony whereof I have signed my name to this specification.

SIDNEY J. FINN.