Sept. 15, 1931. W. H. PEADEN 1,823,406

LUBRICATING OIL DISPENSER

Filed July 3, 1929 2 Sheets-Sheet 1

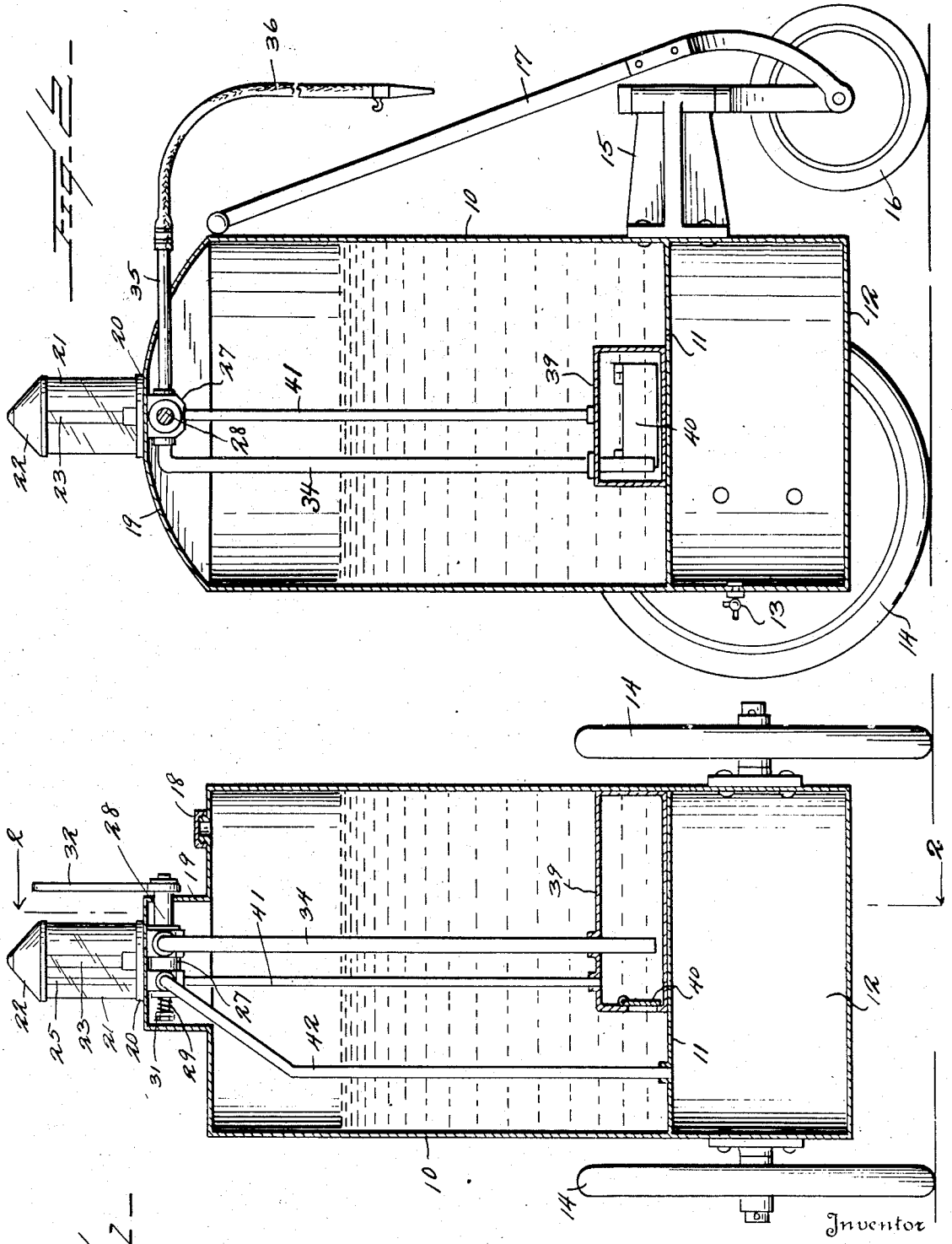

Sept. 15, 1931. W. H. PEADEN 1,823,406

LUBRICATING OIL DISPENSER

Filed July 3, 1929 2 Sheets-Sheet 2

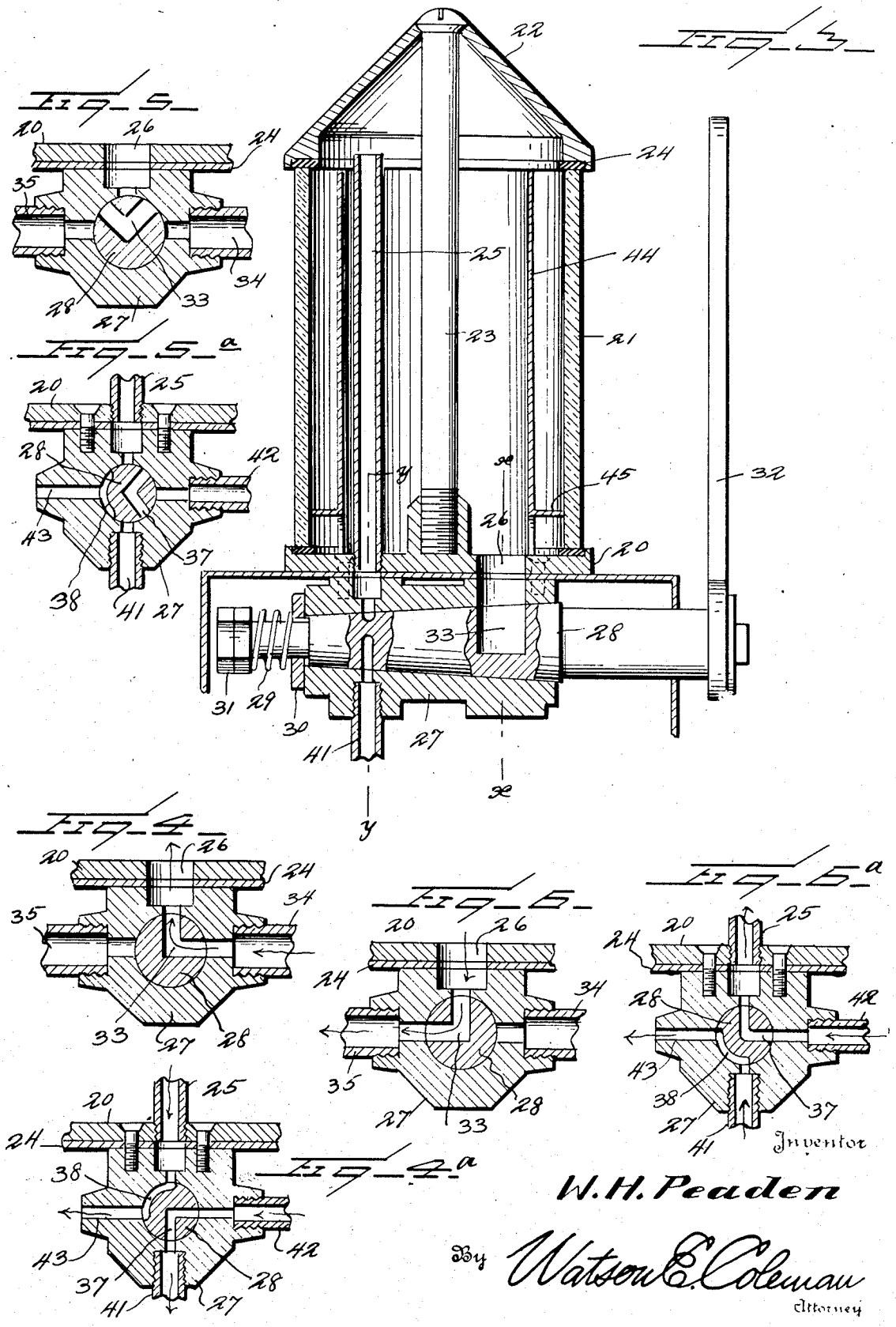

Patented Sept. 15, 1931

1,823,406

UNITED STATES PATENT OFFICE

WILLIAM H. PEADEN, OF TULSA, OKLAHOMA, ASSIGNOR OF TWO-THIRDS TO ARTHUR O'DELL, OF TULSA, OKLAHOMA

LUBRICATING OIL DISPENSER

Application filed July 3, 1929. Serial No. 375,724.

This invention relates to devices for vending lubricating oils at filling stations and particularly to means for putting the lubricating oil directly into the car to a predetermined amount by means of compressed air.

One of the objects of the present invention is to provide a structure of this character in the form of a wheel supported tank which may be shifted to any desired or convenient position with relation to the car and which carries a compressed air tank as part of the structure by means of which the lubricant may be raised into a transparent measuring receptacle and discharged therefrom.

In filling stations, it is usual for the attendant to carry the oil from the oil tank to the car in open measuring receptacles. In doing this, there is a tendency to slop the oil out upon the floor and thus the oil is wasted, the vendee does not secure the proper amount of oil, the floor of the filling station is rendered slippery and greasy and inasmuch as this slopped oil has to be cleaned up by means of gasoline, the fire hazard is increased.

Furthermore carrying the oil in an open receptacle permits dust to collect on the oil and this dust passes into the crank case. Again inasmuch as the oil is taken by the attendant from an oil tank and inasmuch as the measuring vessel is usually made of metal, it is impossible for the owner of the car to see that the oil is pure and is not reclaimed oil.

Hence a further object of this invention is to provide a structure of this character in which the oil at no time comes in contact with dust or dirt but is taken directly from the lubricant containing tank and is discharged by compressed air into a transparent measuring vessel entirely closed and from thence is discharged to the car. Thus the owner of the car may see the oil rise in the measuring vessel, may see that he secures the full amount of oil for which he has paid, and may see that the oil is not reclaimed oil, and a further object in this connection is to provide an oil measuring vessel which is so constructed that there is no liability of the oil oozing out upon the exterior thereof so that the vessel will gather dust and obscure the contents as the oil rises and falls within the vessel.

Another object is to provide a device of this character wherein the lubricating oil is only subjected in small quantities to contact with compressed air to thereby prevent the oil from absorbing moisture from the compressed air and thus becoming deteriorated, and in this connection to provide means whereby the oil is only subjected to the action of the compressed air when the oil is to be forced upward into the measuring vessel or discharged therefrom, and a further object is to provide an auxiliary tank into which the oil from the main tank flows by gravity and from which oil is forced into the measuring vessel, the auxiliary tank holding the oil which is to be forced by compressed air into the measuring vessel and thus the oil in the auxiliary tank being the only portion of the oil which comes in contact with the compressed air for a relatively short time.

Another object is to provide a structure of this character which is fool-proof in that there is no possible chance of pressure accumulating to an undue extent within the measuring vessel or allied parts, which pressure would tend to burst the measuring vessel and in this connection to provide means whereby any excess oil will be discharged from the tank, thus preventing the oil from "piling up" within the tank until the pressure breaks the vessel.

Another object is to provide a simple controlling means which in one position cuts off the vessel from the oil tank and from the compressed air tank and in another position connects the measuring vessel with the auxiliary measuring tank so that the measuring vessel may be filled and in another position causes the compressed air to be discharged into the top of the measuring vessel and the oil discharged out through the discharge hose into the car.

Other objects will appear in the course of the following description.

My invention is illustrated in the accompanying drawings, wherein:—

Figure 1 is a vertical sectional view of a lubricating oil vending structure constructed in accordance with my invention;

Figure 2 is a vertical section on the line 2—2 of Figure 1;

Figure 3 is a vertical section of the measuring vessel and the valve coacting therewith, the valve being in the position to cause the vessel to fill;

Figure 4 is a section on the line X—X of Figure 3 with the valve in the filling position;

Figure 4ª is a section on the line *x—x* of Figure 3 with the valve in filling position;

Figures 5 and 5ª are sections respectively on the lines *x—x* and *y—y* of Figure 3, showing the valve in its neutral position and Figures 6 and 6ª are sections on the line *x—x* and *y—y* showing the valve in the discharge position.

Referring to these drawings, it will be seen that I have provided a lubricant containing tank which is designated 10 and which may have any desired shape or dimensions and that this tank is provided with the bottom 11 and below this bottom with a compressed air tank designated 12. This compressed air tank is provided with means whereby it may be connected to any suitable source of compressed air and the air compressed therein to any desired amount and is also provided with the inlet valve 13 for this purpose as illustrated. This tank 10 with the air tank 12 is mounted upon a wheeled frame of any suitable construction. I have illustrated the tank as being mounted upon two lateral wheels 14 and being supported by a forwardly projecting bracket 15 having therein a rotatable spindle forked at its lower end to receive the steering wheel 16. This wheel is shifted by means of the handle 17 pivoted to the axle of the wheel 16 so that it may be swung down into a pulling or pushing position or swung up to the position shown in Figure 2.

The tank 10 is designed to contain lubricating oil which may be filled into the tank through the opening 18 and the top of this tank at its middle is raised to form a housing 19.

Mounted upon this housing is the filling receptacle comprising a base 20, a transparent cylinder 21 of thick glass and a top 22, this top being held in place by the central screw 23 which extends down through the top and has screw-threaded engagement with the base 20, as shown in Figure 3. The top and base are provided with the gaskets 24 and these are disposed in recesses in the top and base respectively. The screw 23 acts to hold the top and base in oil-tight contact with the ends of the glass cylinder 21.

Mounted within the base is the upwardly extending pipe 25 which extends down through the base and which has a height determined by the amount of oil which the vessel 21 is intended to hold. The base is formed with the relatively large port 26. Disposed below the base is the valve casing 27 wherein is disposed the rotatable or oscillatable conical valve 28 extending entirely through the valve casing and urged to its seat by means of the spring 29, which at one end bears against a washer 30 in turn bearing against the end of the valve casing and which at its other end bears against the adjusting nuts 31. The opposite end of the valve carries upon it the handle 32. This end of the valve extends through the housing 19 so that the valve itself is entirely protected within the housing.

The valve on the line *x—x* of Figure 3 is provided with a right angular passage 33 which is adapted, as shown in Figures 4, 5 and 6, to connect the port 26 either with an inlet pipe 34 leading from an auxiliary tank or with a discharge pipe 35 leading out of the hood or cover 19 and connected to a hose 36, or which is adapted to be shifted to a neutral position, as shown in Figure 5 where the pipes 34 and 35 will be entirely disconnected from the port 26.

The valve on the line *y—y* of Figure 3 as shown in Figures 4ª, 5ª and 6ª is provided with a right angular passage 37 and opposite the apex of this passage with a circumferentially extending groove or duct 38 which extends through a quarter circle. When this valve is in the neutral position shown in Figure 5ª, these passages 37 and 38 will be entirely out of operative position, but when the valve is shifted to one of its two positions, as shown in Figures 4ª and 6ª, these passages will be shifted to connect the measuring vessel with the auxiliary tank or with a vent as will be now stated.

Disposed in the bottom of the tank 10 is an auxiliary tank 39 which is provided with an inlet valve 40 of such type that the lubricant contained within the tank 10 will flow by gravity into the tank 39 and fill this auxiliary tank. The pipe 34 extends downward through the top of the auxiliary tank and nearly to the bottom thereof and as before remarked, enters the valve casing as shown in Figures 4, 5 and 6. Extending downward from the valve casing is an air pipe 41 which opens into the top of the auxiliary tank. This pipe 41 enters the valve casing 27 directly opposite the pipe 25. Entering the valve casing 27 at right angles to the pipe 41 is an air pipe 42 which at its upper end opens into the compressed air tank 12.

When the valve 28 is shifted to its neutral position as shown in Figures 5 and 6, the pipe 34 and the discharge pipe 35 will be cut off from communication with the interior of the measuring vessel while the duct 37 will be turned into such poistion that it will communicate neither with the pipe 41 nor the

air pipe 42 nor with the pipe 25. Assuming that the measuring vessel is empty and it be desired to fill the measuring vessel with oil, the valve is turned to the position shown in Figures 4 and 4[a].

Under these circumstances the pipe 34 is placed in communication with the port 26 so that the oil may flow from the auxiliary tank 39 into the measuring vessel. At the same time the pipe 25 through the circumferential groove 38 on the valve is placed in communication with a vent 42 as shown in Figure 4[a] while the air pipe 41 is placed in communication with the air pipe 42 leading to the air tank. Under these circumstances air will pass upward through the pipe 42 and then downward to the pipe 41 to cause the oil within the auxiliary tank 39 to be forced upward through the pipe 34 and pass upward into the measuring vessel, while the air within the measuring vessel is allowed to pass off through pipe 25, the circumferential groove 38 and the vent 43. When the vessel has been filled, the handle 32 of the valve may be shifted to a neutral position and the oil thus retained within the vessel or if it be desired to immediately discharge the oil, the valve is turned to the position shown in Figures 6 and 6[a]. Under these circumstances, the passage 33 is shifted so as to establish communication between the port 26 and the discharge pipe 35 and the valve connects the pipe 25 with the pipe 42 which leads into the air tank 12. Thus air passes from the air tank 12 upward through the pipe 25 to the space above the oil within the measuring vessel and causes the positive discharge of this oil out through the port 26 and out through the discharge pipe 35. At the same time air is being vented through pipe 41 and vent 43 from the auxiliary tank so as to permit the auxiliary tank to be filled with oil.

As soon as the tank and the measuring vessel have been emptied, the valve 28 should be turned to its neutral position but in case by inadvertance the attendant does not do this, the only effect would be to cause the air from the air tank to continue to discharge into the measuring vessel and this air will be discharged out through the port 26 and out through the hose 37 with a hissing sound which would, of course, draw attention to the fact that the valve had not been closed and act, therefore, as a signal under these circumstances. The utmost that could happen, under these circumstances, would be the exhaustion of the compressed air within the tank 12 and the necessity of recompressing the air within this tank. If, when the valve 28 is moved to a filling position, that is a position in which the measuring vessel is to be filled and after the vessel is filled, the valve 28 is not turned to its neutral position, the only result would be that the oil would continue to rise within the measuring vessel and pass off through the pipe 25 and pipe 41 and out through the vent 43 back into the oil tank and eventually bubbles of air would rise up through the oil in the measuring vessel which would constitute a signal or warning to the attendant that the valve had not been returned to its neutral position, and that under no circumstances, therefore, is there any waste of the oil which is returned under the last named circumstances to the tank itself without any loss and without the oil coming in contact with dust or dirt.

It is particularly desirable in a lubricating oil vending device of this character that the quality of the oil shall be capable of being seen and noted clearly by the observer.

If the observer has to look through a transparent cylinder having approximately a diameter of four or five inches, the extent of oil through which the observer has to look prevents clear observation of the quality of the oil and prevents him from seeing whether it contains foreign particles, dregs and the like. In order to prevent this, I provide means whereby only a small sample, as it were, of the oil need be observed and to this end, I mount within the transparent wall 21 of the measuring vessel a metallic cylinder designated 44 which may be made of any suitable material and which may be either polished or nickel-plated or may be dull, as regards its surface. This cylinder rests upon the base 20 and at its lower end is preferably so formed that oil will flow from the interior of the measuring vessel to the exterior of this cylinder 44. To this end I have formed the lower end of the cylinder 44 with struck-out portions 45 which are struck out and turned at right angles so as to bear against the wall 21 and hold the measuring cylinder against the wall 21. This space is ordinarily approximately a half-inch from the cylinder, though it may be more or less, these outwardly struck lugs 45 constituting centering lugs holding the cylinder in its proper position within the wall 21. By this means, only a relatively small layer of oil is seen by the observer and he can practically look through this oil and see whether it contains any foreign particles, dirt, dregs and the like and thus be certain that the oil is not reclaimed oil.

It will be seen that I have provided a structure which while very simple and which may be cheaply made, at the same time is proof against accidents of any description inasmuch as there is no possibility of pressure accumulating within the measuring vessel or allied parts to an extent which would tend to burst this measuring vessel. It will be further noted that I have provided a construction in which the oil cannot come in contact with foreign matter, but is preserved in all its purity and in which the

buyer can see, not only the amount of oil which he is getting, but see the quality of the oil through the transparent sides of the vessel, thus precluding any possibility of reclaimed or so-called recleaned oil being substituted for the lubricating oil which he is buying.

The construction is such that the compressed air causes all of the oil to be forced out from the measuring vessel through the discharge hose into the car. Thus there is no chance of any oil being retained, but the purchaser knows he is getting a full amount of oil, for which he has paid, discharged into his car. Furthermore, it will be seen that my construction prevents any possibility of bursting of the measuring vessel through undue pressure and no oil is wasted. Again I have provided a construction which is capable of being easily transported from one position to another and thus the oil is brought to the car not in open cans from which it is liable to be slopped and in which the oil may be deteriorated by dust and dirt, but in a closed tank from which oil is discharged directly into the car without the intervention of any measuring vessel save that which forms a unitary part of the structure. At any time that the air within the compressed air tank has become reduced below the necessary pressure, the compressed air tank may be readily filled with compressed air.

I claim:—

In a liquid dispensing device having a liquid tank, an air pressure tank, pipe means connecting said pressure tank with said liquid tank, discharging means for discharging the liquid from the liquid tank, and a compound valve interposed in the connecting pipe connecting said pressure tank to said liquid tank and also interposed in the discharging means, said valve comprising a casing, a rotatable valve stem mounted in the casing, said casing having an inlet port, an outlet port and an overflow port, said valve stem having an angularly disposed port therethrough whereby to permit intercommunication between selected ports, said valve casing also having a plurality of pairs of oppositely disposed air ports communicating with said pipe connection and said pressure tank, said valve stem having a peripheral and an angularly disposed port therein permitting communication with selected pairs of air ports upon rotation of the valve stem, said air ports in said casing and said valve stem being disposed in spaced relation to the liquid ports of said casing, said valve stem upon rotation thereof for discharge of liquid through the discharge means being adapted to connect selected air ports together whereby to permit forced discharge of the liquid through the discharge port.

In testimony whereof I hereunto affix my signature.

WILLIAM H. PEADEN.