March 17, 1931. W. G. E. ROLAFF 1,796,535

BLADE CONSTRUCTION FOR COMPRESSORS OF THE ROTARY TYPE

Filed Sept. 26, 1927 2 Sheets-Sheet 1

Fig. 1.

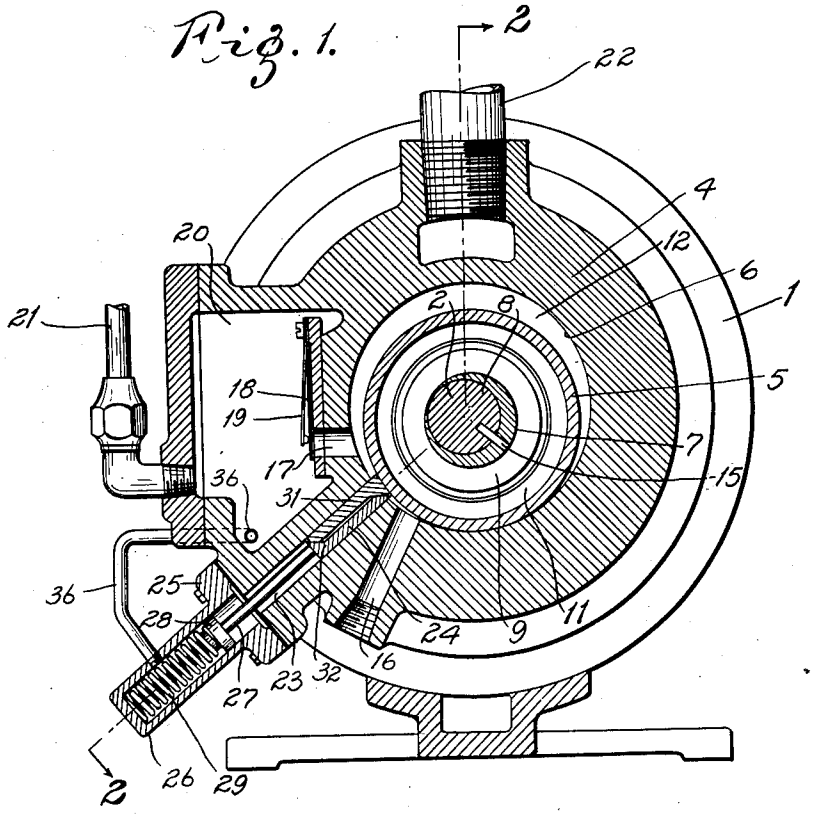

Fig. 7.

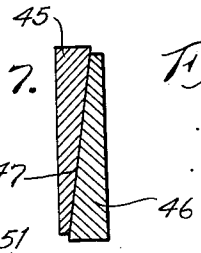

Fig. 11.

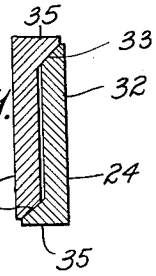

Fig. 9.

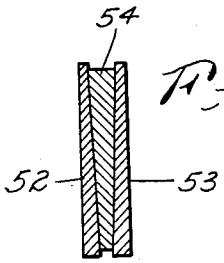

Fig. 8.

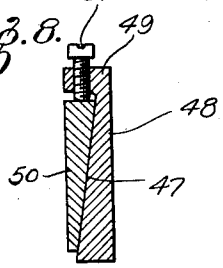

Fig. 10.

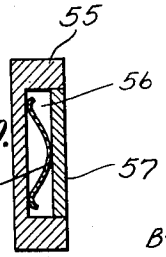

INVENTOR:
WALTER G. E. ROLAFF.
By Elliott & Harrington
ATTORNEYS.

March 17, 1931. W. G. E. ROLAFF 1,796,535

BLADE CONSTRUCTION FOR COMPRESSORS OF THE ROTARY TYPE

Filed Sept. 26, 1927 2 Sheets-Sheet 2

Fig. 2.

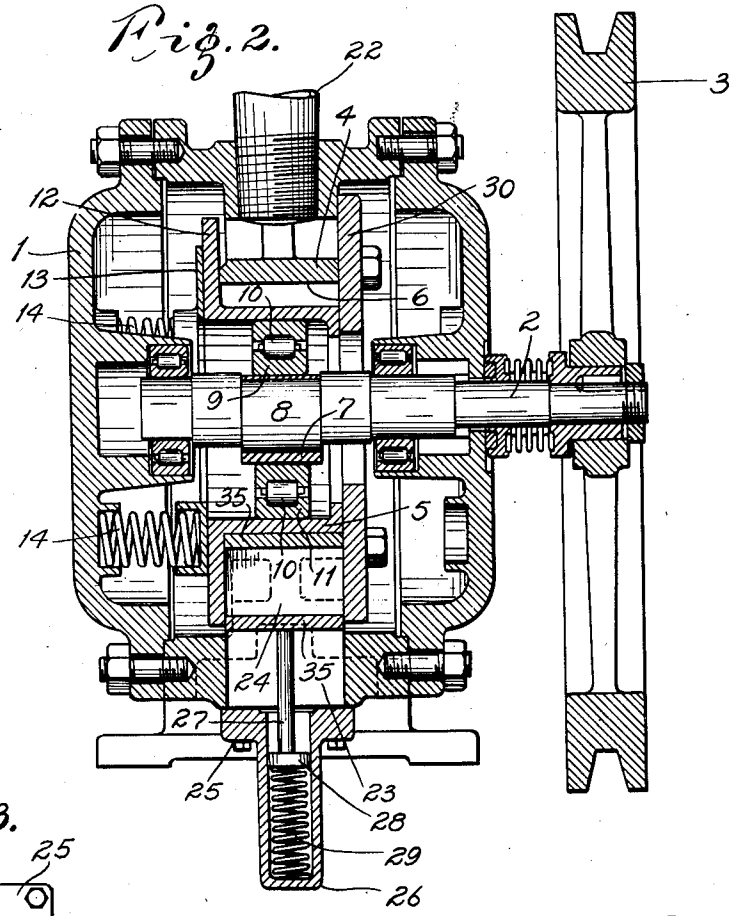

Fig. 3.

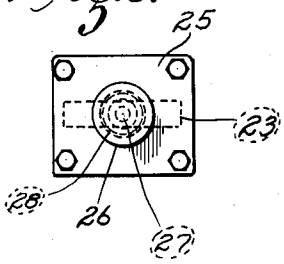

Fig. 4.

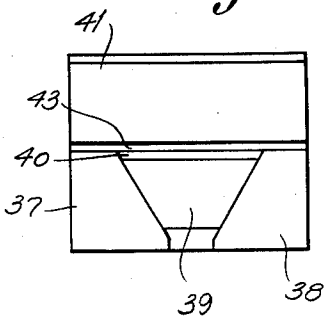

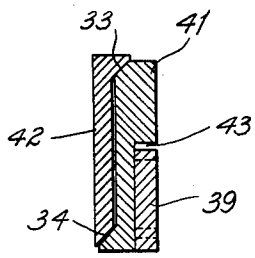

Fig. 5.

Fig. 6.

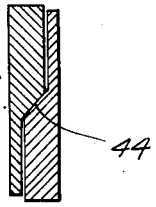

INVENTOR:
WALTER G. E. ROLAFF.
BY Elliott Harrington
ATTORNEYS

Patented Mar. 17, 1931

1,796,535

UNITED STATES PATENT OFFICE

WALTER G. E. ROLAFF, OF KIRKWOOD, MISSOURI

BLADE CONSTRUCTION FOR COMPRESSORS OF THE ROTARY TYPE

Application filed September 26, 1927. Serial No. 221,977.

The general object of this invention is to provide an improved piston blade for use in rotary compressors, which, in operation, will provide an efficient seal between the blade and the walls of the blade slot without creating undue friction, which will automatically compensate for wear, and which will prevent angular displacement, or cocking, of the blade within the slot, so that the entire surface of the blade will bear upon the walls of the slot.

With the above general object in view, my invention resides, broadly, in providing an expanding blade which, in operation, is capable of automatically adjusting itself under pressure to engage the walls of its slot with sufficient force to provide an effective seal between the wearing surfaces of said blade and the walls of said slot.

My invention further resides in providing a blade which shall not only be capable of expanding at right angles to the axis of rotation of the rotor to make sealing contact with the walls of the slot, but which shall also be capable of expanding in a direction parallel to said axis, whereby said blade will operate to effect a seal with the end walls of the cylinder. This latter feature of a blade expanding parallel with the axis to engage with compensating pressure the cylinder ends is disclosed in my prior Patents No. 1,280,306, dated October 1st, 1918, and No. 1,358,176, dated November 9th, 1920.

While the blades of these prior patents were vastly superior in operation to solid blades, or other forms of blades of the prior art, it was found that unless very accurately fitted to the blade slot in the rotor, or, in the present arrangement, to the slot in the cylinder wall, they would allow too much oil to go into the cylinder, which oil, in the case of the use of methyl chloride as the refrigerant, would become heavily impregnated with this substance and would re-expand in the low pressure side of the cylinder and thus seriously reduce the efficiency of the machine. In other words, while the expanding blades of my prior patents form and maintain a perfect seal with the ends of the cylinder, they do not form such a seal with the walls of the blade slot in the rotor. Again, even a blade fitted very accurately in the blade slot of the rotor would, by reason of the direction of forces exerted upon it, assume a slanting or cocked position in the slot which would cause is to wear on the upper and lower edges and gradually detrimentally affect the efficiency of the machine for the same reason and in exactly the same manner as if the blade had been loosely fitted in the first place.

For the above reasons, and for others which need not be mentioned, the use of ordinary lubricating oil was found impracticable, and glycerine was substituted therefor in conjunction with methyl chloride as a refrigerant. While glycerine is an efficient lubricant, it was found that it developed acids which were very injurious to the machine as a whole. These difficulties necessitated the provision of some means, therefore, which would permit the use of ordinary lubricating oil and at the same time prevent the leakage of oil and refrigerant into the low side of the system, which makes it necessary to shut down the machine from time to time to remove the accumulation of lubricant from the low side. Consideration of the conditions resulting from the operation of compressors having only blades which sealed against the ends of the cylinder induced the conclusion that the difficulty lay in an imperfect sealing of the blade in the slot. As a result, the present type of blade was evolved and it has been found in practice that such a blade entirely removes the objections above noted, and in the use of this blade I am now able to employ ordinary oil as a lubricant in conjunction with methyl chloride, which, owing to the high efficiency of the latter as a refrigerant, as compared with sulphur dioxide, for example, is extremely desirable, although heretofore the joint use of these two substances in a rotary compressor has been found utterly impracticable.

The invention is illustrated in the accompanying drawing, in which—

Figure 1 is a cross-section through a rotary compressor provided with a preferred form of my improved blade;

Figure 2 is a section on the line 2—2 of

Fig. 1 and viewed in the direction of the arrows;

Figure 3 is a view in front elevation of the housing enclosing the spring for maintaining pressure on the blade;

Figure 4 is a view in front elevation of a double compensating blade;

Figure 5 is a cross-sectional view thereof;

Figure 6 is a cross-sectional view of a modified construction of blade which expands only in one direction for sealing the blade slot and which is provided with meeting surfaces to effect a wedge action, the angle of the surfaces being such as to prevent jamming;

Figures 7, 8, 9 and 10 illustrate modified constructions of blades showing various ways of producing the expanding action of the blades according to my invention; and

Figure 11 is a view in cross-section on an enlarged scale of the preferred form of blade, shown embodied in the structure of Fig. 1.

Referring now particularly to Figs. 1 and 2, the numeral 1 indicates a casing of a rotary compressor in which is mounted a shaft 2 driven by any conventional means such as a pulley 3 mounted on the end of said shaft extending beyond the casing. The casing 1 encloses a cylinder 4 within which is mounted a rotor 5, which is adapted to have a gyratory movement imparted thereto so as to cause it to roll over the inner wall 6 of the bore of the cylinder. Motion of the rotor is effected through the medium of an eccentric ring 7 which is mounted on an eccentric 8 formed on the shaft 2. Loosely mounted on the eccentric ring 7 is a ring 9 which supports on its periphery a series of roller bearings 10 on which is mounted a bearing ring 11 which, in turn, is in engagement with the inner wall of the rotor 5 and serves as the supporting bearing for the rotor. The rotor 5 is provided with an integral flange 12 which closes one end of the cylinder, as shown by Fig. 2, being yieldingly held in such contact through the medium of a circular plate 13 forced against the outer side of the flange 12 by means of springs 14. The rotor is adjusted in position to engage the wall 6 of the cylinder by first turning the eccentric ring 7 over the eccentric 8, and when the proper contact of the rotor with the wall of the cylinder is thereby effected, the eccentric ring is permanently locked in position on the eccentric 8 of the shaft by means of a key 15, or in any other suitable manner. It will be readily seen that as the shaft revolves, the eccentric ring 7 being locked in position on the eccentric 8 of the shaft, will itself act as an eccentric to impart, in its rotation, a gyratory movement to the ring bearing 9—11, as it rotates within the latter, and will impart a corresponding movement to the rotor 5. Extending through the wall of the cylinder 4 is an inlet port 16, and at a suitable distance therefrom, an outlet port 17. The latter is closed against back pressure by a valve 18 which is yieldingly held against the outer end of the port 17 by means of a leaf spring 19. The port 17 discharges into a chamber 20 from which leads a discharge pipe 21. In practice, the discharge pipe 21 would communicate with a separating chamber from the bottom of which a pipe 22 communicates with the cylinder to return lubricant to the machine. As these features, however, form no part of the present invention, they are not illustrated. They are clearly shown in my allowed application Serial No. 33,952, filed June 1st, 1925, patented June 14, 1927, No. 1,632,562.

Extending through the wall of the cylinder 4 between the inlet port 16 and outlet port 17 is a rectangular slot 23 in which is mounted my improved blade 24. Secured to the casting of the cylinder over the slot 23 is a plate 25 (Figs. 1 and 3) having an extension 26, closed at its outer end and provided with a circular bore which extends also through the plate 25. Secured to the outer end of the blade 24 is a rod 27 having on its outer end a disk 28 which fits snugly in the bore of the extension 26. Mounted in the bore of this extension is a coil spring 29 which bears at one end against the closed end of the extension and at its other, against the disk 28. This spring operates to hold the blade 24 in yielding contact with the periphery of the rotor 5. As shown by Fig. 2, the blade 24 is of a width to extend between the end walls of the cylinder, one of these walls 30 being fixed, as indicated in Fig. 2, and the other being formed by the flange 12 of the rotor, as previously referred to. For ordinary use, the form of blade which I prefer is that shown in Fig. 1 and on an enlarged scale in Fig. 11. This blade is made of two similar members 31 and 32, respectively, separated longitudinally and correspondingly inclined at their opposite ends to provide angular meeting surfaces 33 and 34, one end of each blade being enlarged, as indicated at 35, for this purpose. The rod 27 is secured on one of these enlarged ends. It will readily be seen that pressure of the spring 29 will cause the inclined surfaces 33 and 34 of one of the members 31 (the member 32 as shown in the drawing) to slide over the similar inclined surfaces of the other member, thus tending to separate the two parts of the blades laterally and force their outer surfaces against the walls of the slot 23. This operates to form an effective sealing contact between the blade and the walls of its slot, and the two contacts at the angles or inclined surfaces seal off any bypassing of either gas or oil. In this construction, it will be seen that the top of one half of the blade 24 is under spring pressure while the bottom part of the other half is in contact with the rotor. The top of the part 32 of the blade is also under the pressure generated by the machine, as in the

manner shown in my pending application above referred to, and for this purpose I have shown conventionally a pipe 36 connecting the high pressure chamber 20 with the bore of the extension 26 beyond the disk 28. In initially starting the machine, the spring 29 will afford sufficient pressure to maintain the blade in sealing contact with the periphery of the rotor. Thereafter, as pressure is built up within the machine, such pressure will also be exerted on the blade and the higher the pressure the more firmly the blade will be forced against the rotor and as well against the sides of the blade slot.

Where it is desired to have a blade expand in two directions so as to form a compensating sealing contact with both the end walls of the cylinder and the walls of the blade slot, I employ the construction of blade shown in Figs. 4 and 5. In this construction, the contact with the end walls of the cylinder is produced by a pair of packing plates 37 and 38, respectively, inclined on their inner sides to provide a wedge-shaped space, and in this space I locate a freely movable wedge plate 39, the side edges of which engage the inclined edges of the packing plates so that when pressure is exerted upon the top of the wedge plate, it will tend to force the wedge plate inward and thus separate the packing plates, forcing their outer ends into engagement with the ends of the cylinder. In this construction, the packing plates 37 and 38 and the wedge plate 39 are mounted in a recess 40 formed on the outer side of one member 41 of the blade otherwise formed as the blade 24 shown in Fig. 11, such member being suitably thickened as shown in Fig. 5 to provide for said recess. On the side opposite to that containing the recess 40, the member 41 of the blade is inclined at its top and bottom, and the other part of the blade 42 is correspondingly inclined to provide the inclined meeting surfaces 33 and 34 described with reference to the construction of Fig. 11. It will be noted that a slight space 43 is provided between the top of the wedge plate 39 and the top of the recess 40 which will permit the pressure within the casting to exert its force upon the top of the wedge plate 39.

In Fig. 6, I have illustrated a modified construction of blade embodying the principle of the blade shown in Figs. 5 and 11 as to the wedging action afforded by opposed inclined surfaces, but in this construction the inclined meeting surfaces, indicated at 44, are located at the center of the blade instead of at both ends as in the construction first referred to.

In Figs. 7 to 9, inclusive, I have shown various ways of securing the wedging action by inclined meeting surfaces. In Fig. 7, the blade is composed of two similarly shaped members 45 and 46 oppositely inclined from one end to the other, respectively, to provide an inclined meeting surface 47 extending substantially throughout the length of the blade. In Fig. 8, a similar construction is shown except that in this case, the expansion of the blade is caused mechanically instead of automatically. To this end, one of the blades 48 is provided with a top extension 49 projecting over the upper end of the other member 50 of the blade and has a set screw 51 mounted therein and adapted to bear upon the top of the member 50 of the blade, so that by screwing down on the set screw 51, the two members of the blade may be moved laterally to cause them to engage the side walls of the blade slot with sufficient force to provide a sealing contact without producing undue friction in operation. It will be understood, of course, in this connection, that there is always a film of oil between the contact surfaces of the blade and the wall of the slot, and this applies to all of the constructions. In Fig. 9, I have shown a blade composed of three parts, two outer members 52 and 53 and an inner member 54, the members 52 and 53 having their inner sides inclined outwardly in an upward direction, and the inner member 54 being correspondingly inclined in the opposite direction. Pressure, either automatic or otherwise, will, of course, be exerted on the end of the member 54 to cause the necessary lateral displacement of the members 52 and 53 to produce sealing contact with the walls of the slot.

In Fig. 10, the expansion of the blade is produced by means of a spring. In this construction, one member of the blade 55 is made of sufficient thickness to substantially fill the blade slot, and intermediate its ends is provided with a recess 56 in one of its sides, in which is mounted a plate 57 normally lying flush with the side of the blade, and between this blade and the bottom of the recess 56 is located a spring 58 which will operate to force the plate 57 outwardly into yielding contact with the wall of the blade slot.

The blades illustrated in Figs. 6 to 10 are largely presented for the purpose of showing that the broad idea of causing a blade to expand in its slot so that it will always form sealing contact therewith may find its embodiment in various arrangements of the numbers of the blade, to support the statement which I now make that such broad idea of the invention is not limited to any one of the particular embodiments of the invention which I have shown. However, I may state that where it is desired to provide a compensating sealing contact between the blade and the walls of its slot, I prefer the construction shown in Figs. 1 and 11. Where a double expanding blade is desired, I, of course, prefer the construction shown in Figs. 4 and 5.

Furthermore, the invention is not limited to the use of the expanding blade with pres-

sure developed in the machine, as where it is required for producing relatively low pressures, the spring 29 may be found sufficient to exert the necessary pressure to maintain a sealing contact of the blade with the rotor. However, as the use of pressure developed in the machine affords a compensating action on the blade, causing the blade to be forced into firmer contact with the rotor, the higher the pressure that is developed by the latter in the machine, and as this action, moreover, is automatic, I practically in all cases find it desirable to employ the pressure developed in the machine in conjunction with the spring 29.

I claim:

1. In a compressor having a rotor and a cylinder affording a blade slot, a blade slidably mounted in said slot and bearing at one end on the periphery of said rotor to separate the inlet from the discharge of said cylinder, said blade comprising two members placed side by side and having a point of contact providing corresponding inclined surfaces, one of said members projecting beyond the other at its inner end and providing the contact surface for the rotor and the other member being longitudinally movable with respect to the first member, and means for continuously exerting yielding pressure on the outer end of said other member to cause its inclined surface to ride over the inclined surface of the first named member, whereby to cause said blade to expand and maintain sealing contact with the walls of its slot.

2. In a compressor having a rotor and a cylinder affording a blade slot, a blade slidably mounted in said slot and bearing at one end on the periphery of said rotor to separate the inlet from the discharge of said cylinder, said blade comprising two members placed side by side and having a point of contact providing corresponding inclined surfaces, one of said members projecting beyond the other at its inner end and providing the contact surface for the rotor and the other member being longitudinally movable with respect to the first member, and means for continuously applying pressure generated by the compressor on the outer end of said other member to cause its inclined surface to ride over the inclined surface of said first named blade, whereby to expand said blade and cause it to maintain sealing contact with the walls of its slot.

3. In a compressor having a rotor and a cylinder affording a blade slot, a blade slidably mounted in said slot and cooperating with the rotor and cylinder to separate the inlet from the discharge of said cylinder, said blade being expansible in two directions at right angles to each other under pressure to maintain sealing contact with the end walls of the cylinder and the walls of said slot, and means for continuously applying pressure generated by the compressor to said blade.

4. A blade for use in the blade slot of a compressor having a rotor, comprising two members arranged side by side and provided at their opposite ends with correspondingly inclined meeting surfaces.

5. A blade for use in the blade slot of a compressor having a rotor, comprising two members arranged side by side and provided at their opposite ends with correspondingly inclined meeting surfaces, and a pair of expansible packing plates mounted on one of said members.

6. A blade for use in the blade slot of a compressor having a rotor, comprising two members expansible under pressure at right angles to the axis of the rotor, and two other members expansible under pressure in a direction parallel with the axis of the rotor.

In testimony whereof, I have hereunto set my hand.

WALTER G. E. ROLAFF.