May 17, 1927. F. E. WRIGHT ET AL 1,628,944

COMPRESSOR FOR REFRIGERATING APPARATUS

Filed Feb. 1, 1924 5 Sheets-Sheet 1

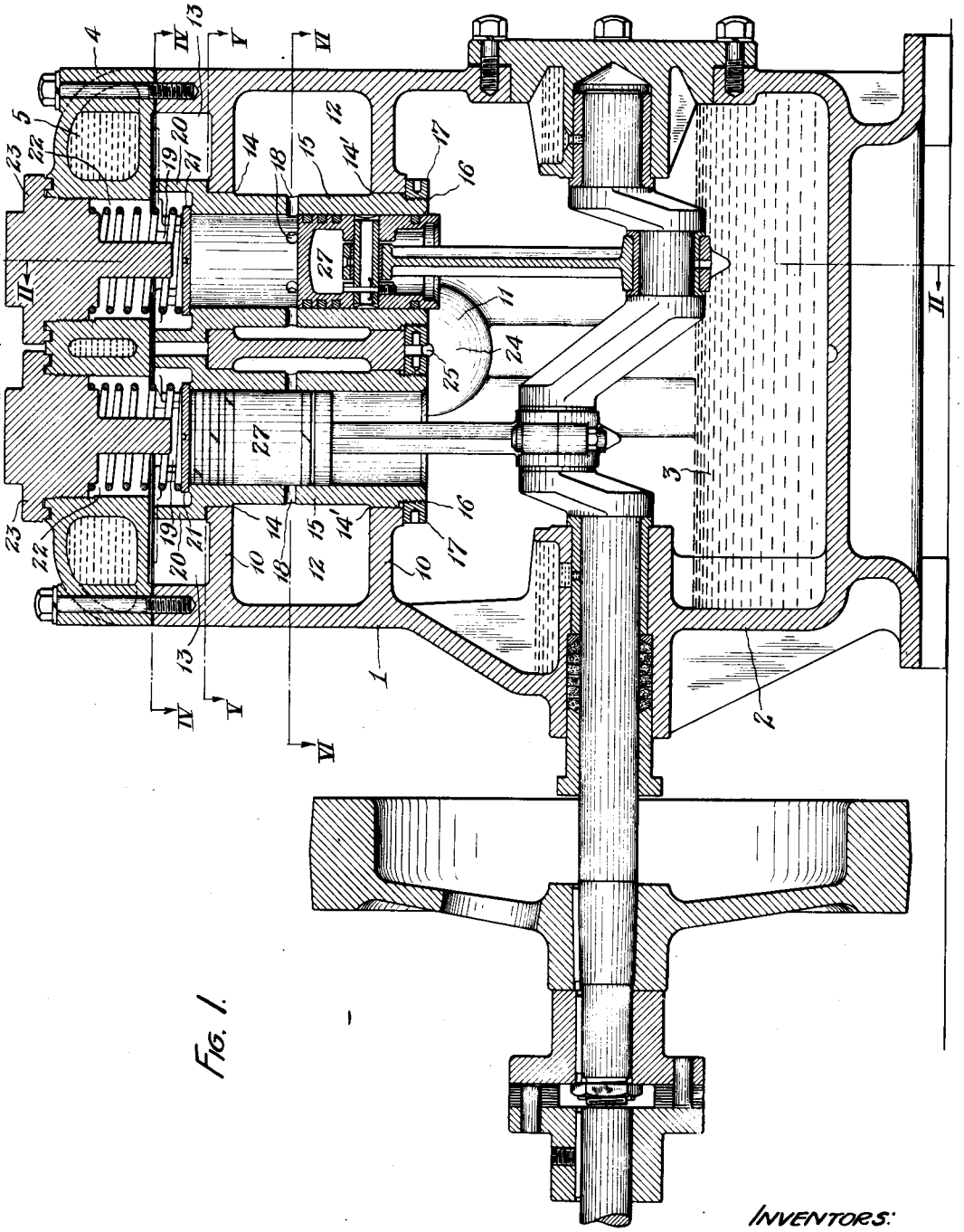

FIG. 1.

INVENTORS:
FRANCIS E. WRIGHT
AND
RALPH M. WARNER
BY Otto Meissel,
ATTORNEY.

May 17, 1927. 1,628,944

F. E. WRIGHT ET AL

COMPRESSOR FOR REFRIGERATING APPARATUS

Filed Feb. 1, 1924 5 Sheets-Sheet 2

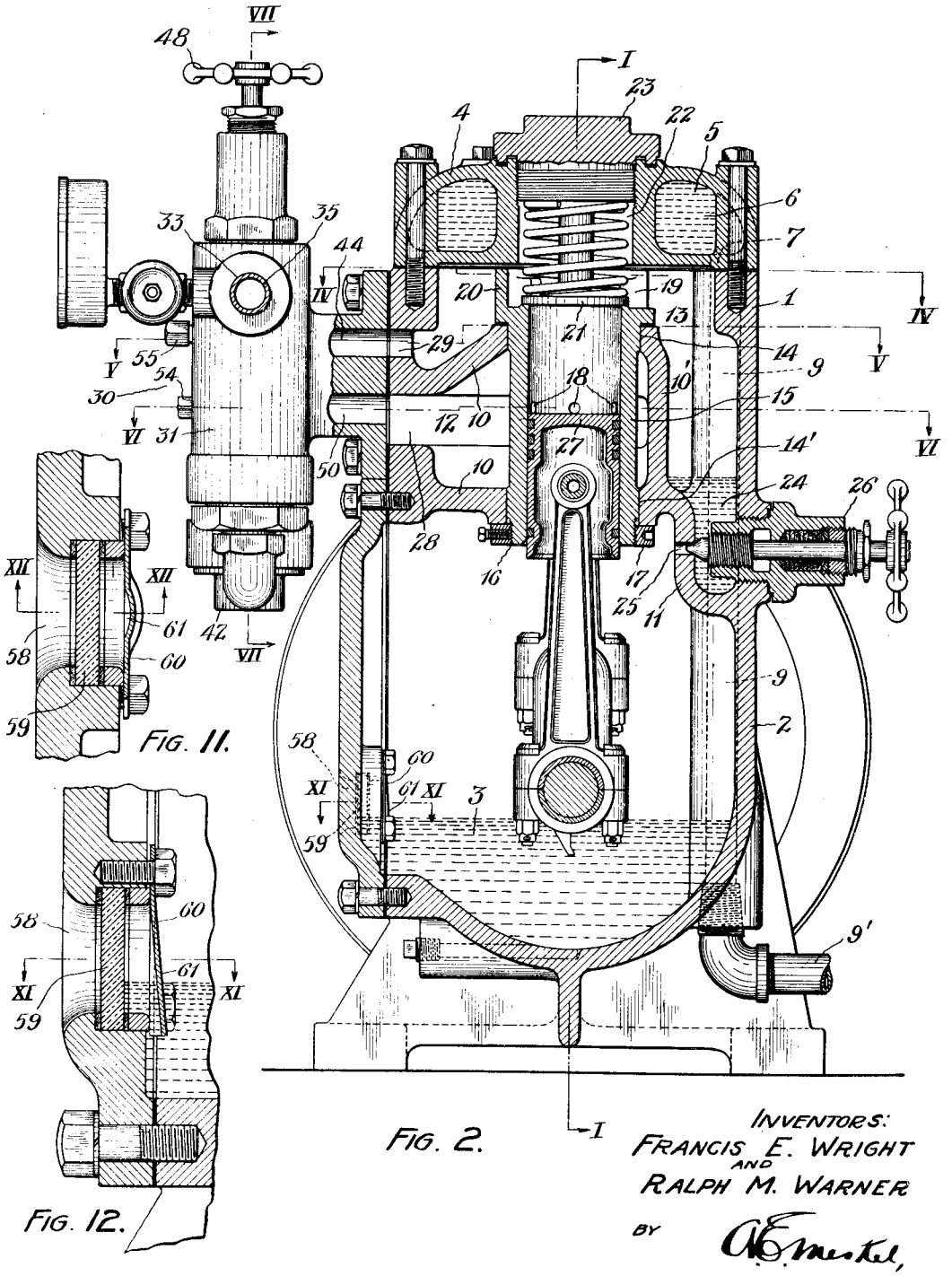

INVENTORS:
FRANCIS E. WRIGHT
AND
RALPH M. WARNER
BY
ATTORNEY.

May 17, 1927. F. E. WRIGHT ET AL 1,628,944

COMPRESSOR FOR REFRIGERATING APPARATUS

Filed Feb. 1, 1924 5 Sheets-Sheet 3

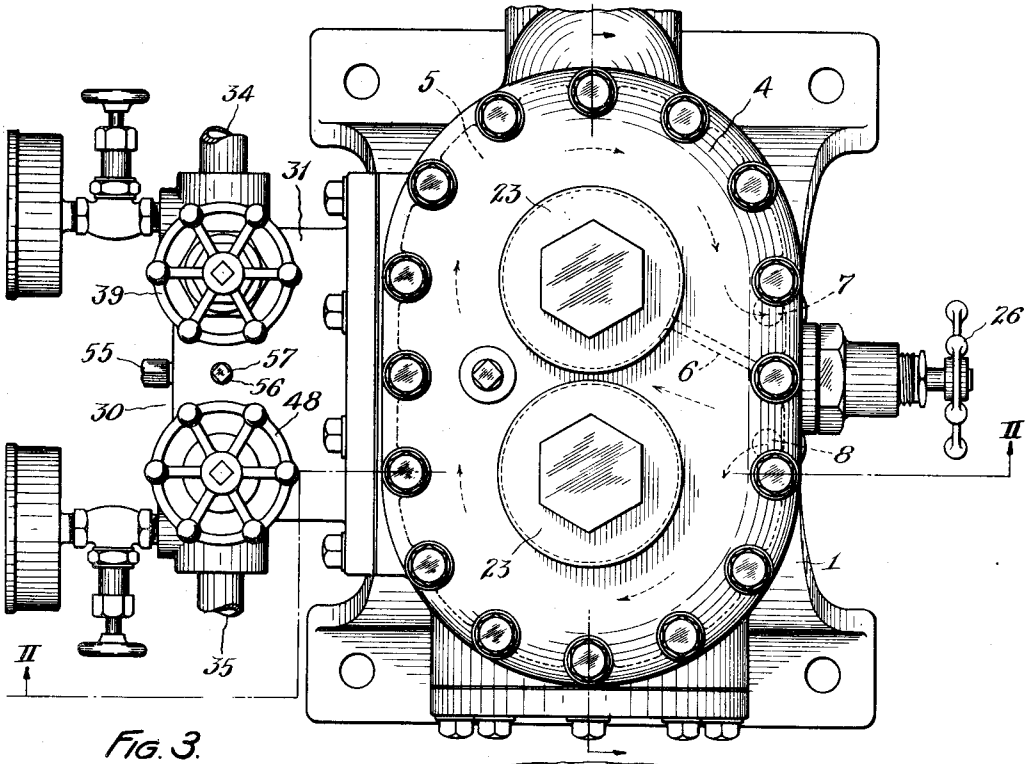

FIG. 3.

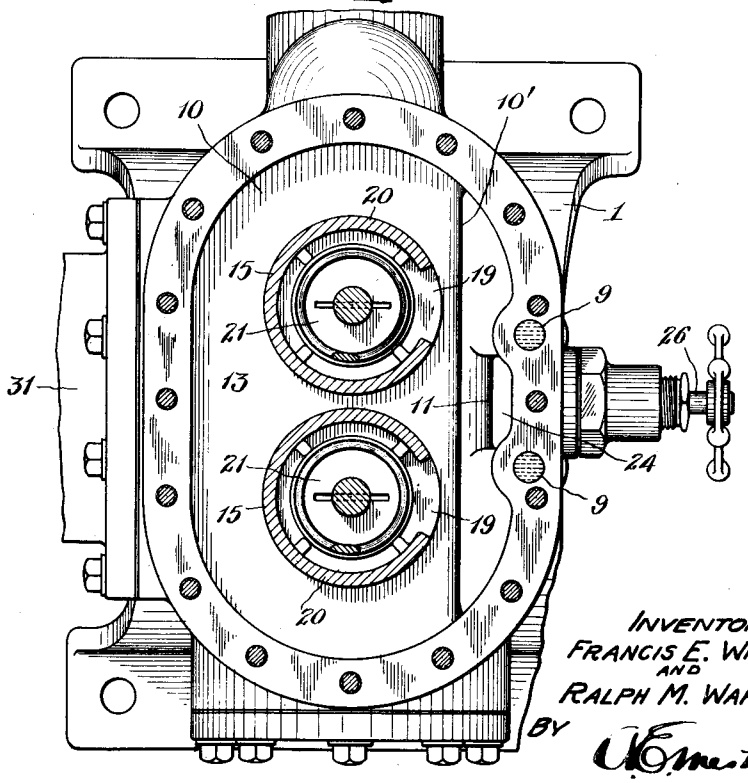

FIG. 4.

INVENTORS:
FRANCIS E. WRIGHT
AND
RALPH M. WARNER
BY
ATTORNEY

May 17, 1927. F. E. WRIGHT ET AL 1,628,944

COMPRESSOR FOR REFRIGERATING APPARATUS

Filed Feb. 1, 1924 5 Sheets-Sheet 4

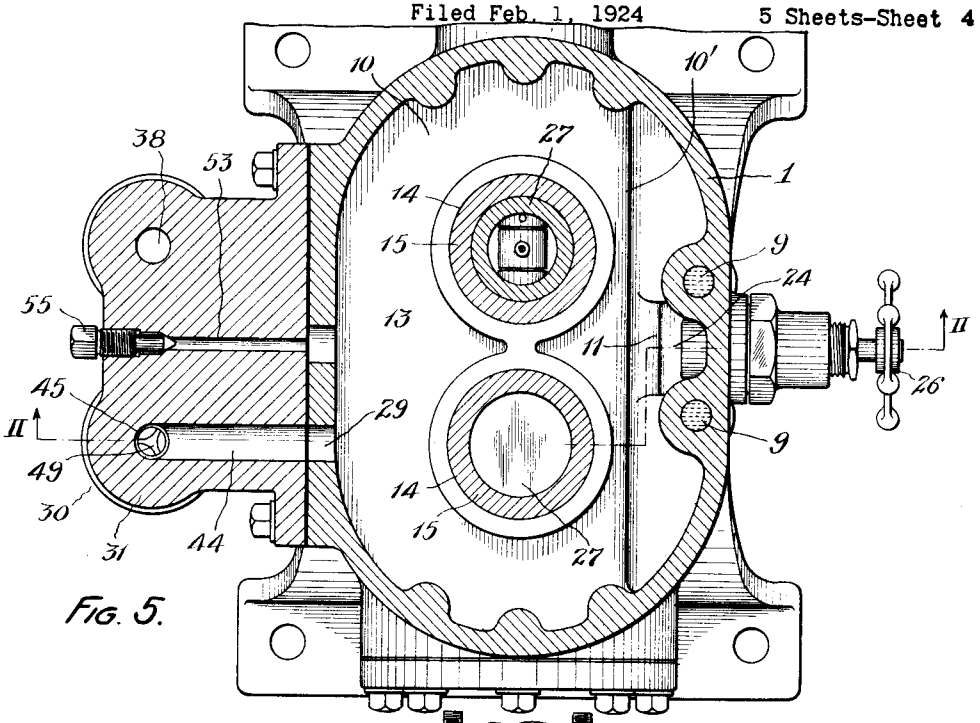

FIG. 5.

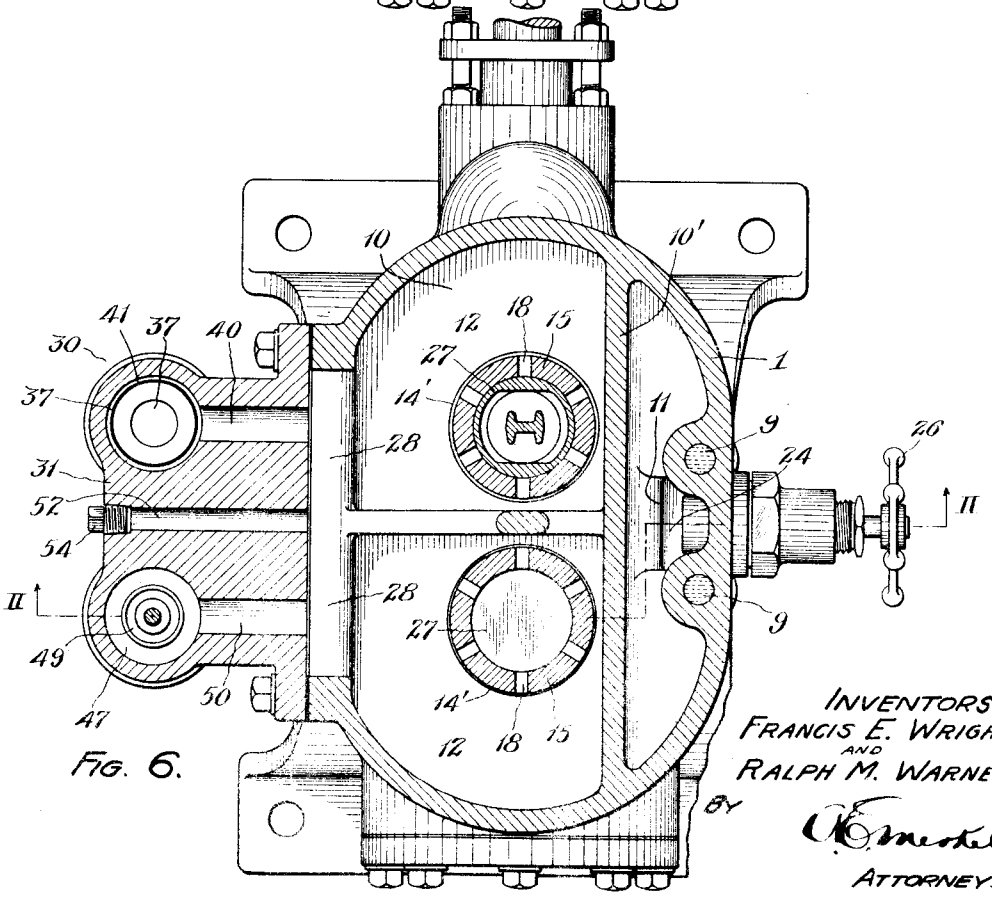

FIG. 6.

INVENTORS:
FRANCIS E. WRIGHT
AND
RALPH M. WARNER
BY
C. E. Mitchel,
ATTORNEY.

May 17, 1927. F. E. WRIGHT ET AL 1,628,944

COMPRESSOR FOR REFRIGERATING APPARATUS

Filed Feb. 1, 1924 5 Sheets-Sheet 5

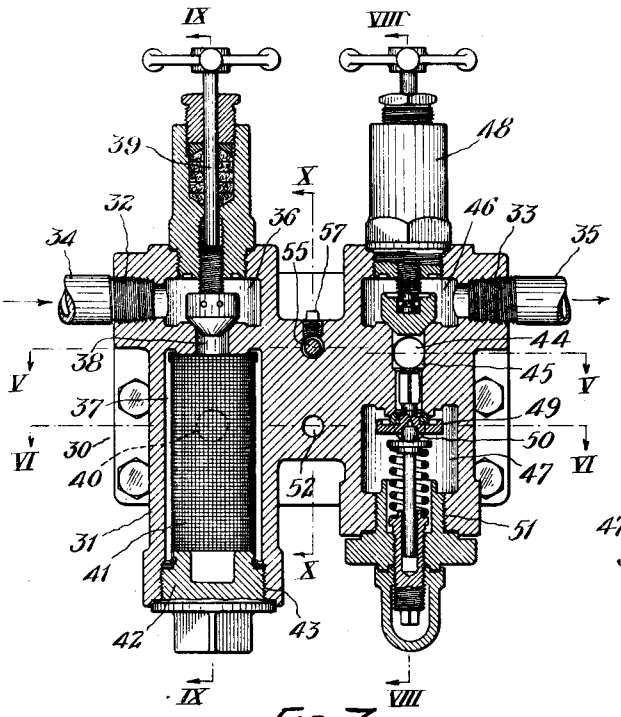

FIG. 7.

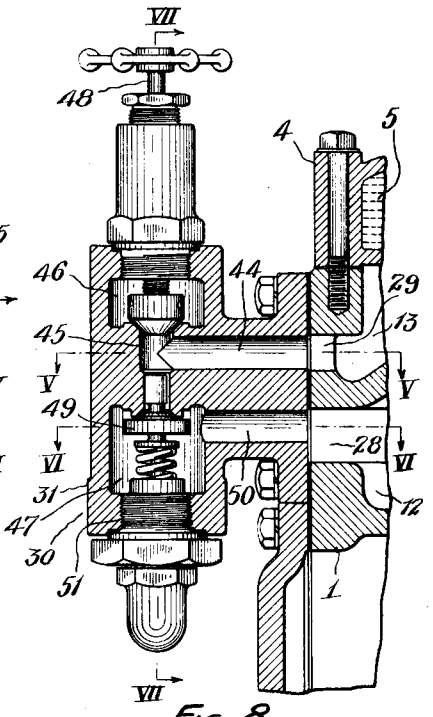

FIG. 8.

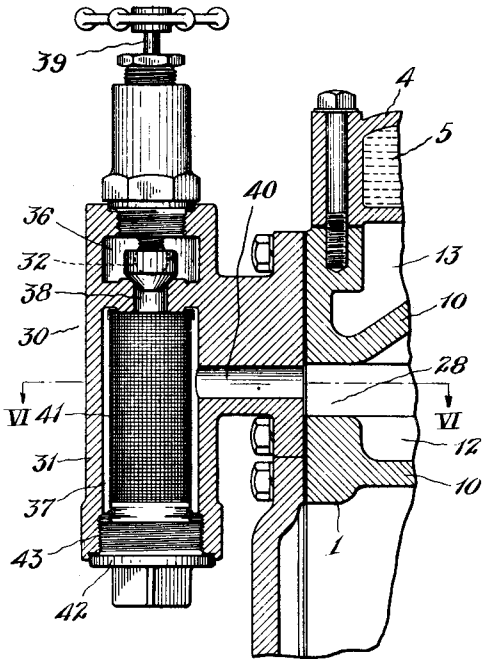

FIG. 9.

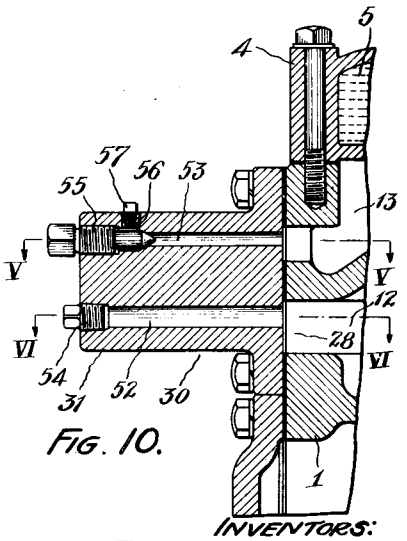

FIG. 10.

INVENTORS:
FRANCIS E. WRIGHT
AND
RALPH M. WARNER
BY O. E. Sundstrom,
ATTORNEY.

Patented May 17, 1927. 1,628,944

UNITED STATES PATENT OFFICE.

FRANCIS E. WRIGHT, OF CLEVELAND, AND RALPH M. WARNER, OF EAST CLEVELAND, OHIO.

COMPRESSOR FOR REFRIGERATING APPARATUS.

Application filed February 1, 1924. Serial No. 689,838.

Our invention relates to compressors, and particularly to compressors used in connection with refrigerating systems, wherein a gas is compressed, liquefied, sent through a circulating system in which it expands, and then returns to the compressor to be re-compressed.

The object of our invention is to provide a more ready and facile control of the gas, to provide means for relieving the pressure in the compressor in case the main line becomes accidentally stopped, also to provide means whereby the lubricating oil employed in the compressor may be more readily extracted from the compressed gas, and also to provide means for more readily permitting the influx of the gas into the compressing cylinder and the efflux therefrom.

The said invention consists of means hereinafter fully described and particularly set forth in the claims.

The annexed drawings and the following description set forth in detail certain means embodying our invention, the disclosed means, however, constituting but one of the various mechanical forms in which the principle of the invention may be employed.

In the said annexed drawings:

Figure 1 represents a vertical longitudinal section of a compressor embodying the various features of our invention, certain parts, however, cut by the plane of section, being shown in side elevation.

Fig. 2 represents a vertical transverse section taken upon the planes indicated by lines II—II in Figs. 1 and 3, the latter being a plan of the compressor.

Fig. 4 represents a horizontal section taken upon the plane indicated by line IV—IV in Fig. 2.

Fig. 5 represents a horizontal section taken upon the planes indicated by lines V—V, in Fig. 2.

Fig. 6 represents a horizontal section taken upon the planes indicated by lines VI—VI, in Fig. 2.

Fig. 7 represents a vertical detail section taken upon the plane indicated by line VII—VII in Fig. 2.

Fig. 8 represents a vertical section taken upon the plane indicated by line VIII—VIII in Fig. 7, certain parts cut by the plane of section being shown in elevation.

Fig. 9 represents a section taken upon the plane indicated by line IX—IX in Fig. 7, certain parts cut by the plane of section being shown in elevation.

Fig. 10 represents a section taken upon the plane indicated by line X—X in Fig. 7.

Fig. 11 represents, upon an enlarged scale, a detail section taken upon the plane indicated by line XI—XI in Fig. 2.

Fig. 12 represents a section taken upon the plane indicated by line XII—XII in Fig. 11.

The annexed drawings illustrate our invention as applied to a duplex or two cylinder compressor, but it is to be understood that the principles of said invention may apply to a compressor having one or any other number of cylinders.

The illustrated embodiment of our invention comprises a main housing 1 whose lower portion 2 forms a closed crank case, the bottom of which contains the usual supply of lubricating oil 3, through which the cranks pass and splash the oil, as in the usual splash system of lubrication.

The upper part of the housing is provided with a removable top 4 which is formed with an interior water space 5 through which water is circulated for cooling purposes. This space is divided by a vertical wall 6, Fig. 3, upon one side of which is the water outlet 7, and upon the other side of which is the water inlet 8 as shown in dotted lines in said Figure. The outlet 7 and the inlet 8 register with the upper ends of two vertical ducts 9—9 whose walls are formed integrally with the back wall of the housing. The bottoms of these ducts are connected to a suitable water inlet 9′ and outlet (not shown) as will be readily understood, such inlet pipe being shown in Fig. 2.

The interior of the housing is provided with transverse walls 10 and 11, Fig. 2, which are cast integrally with the main portion of the housing, and connected by an upright wall portion 10′. These walls form two enlarged chambers 12 and 13 respectively, and are furthermore formed with two sets of vertically alined openings 14 and 14′, each set forming a seat for a vertical cylinder 15. The bottom of each cylinder is threaded as at 16 and is removably secured in its seat by means of a threaded collar 17, the connection between the cylinder

walls and the adjacent walls 10 being made gas-tight in any suitable well-known manner.

Intermediately of the ends of each cylinder, and therefore communicating with the enlarged chamber 12, is a gas inlet consisting of a plurality of perforations 18 passing through the sides of the cylinder wall, Fig. 6. The upper end of each cylinder is provided with a gas outlet 19 which is formed in the side of a flange 20 extending upwardly at the top of the cylinder to within a short distance of the removable top 4 as shown in Fig. 2. The outlets 19 are located respectively opposite the walls of the water-ducts 9—9 as shown in Fig. 4, and each is furthermore controlled by a spring-actuated normally closed check-valve 21. This valve is placed opposite an opening 22 closed by a plug 23, said opening being of a size sufficient to permit the removal of the valve upwardly through the top when the said plug 23 is removed.

The walls 10 and 11 are so arranged that the rear of the chamber 13 extends downwardly and forms a well 24 which is adapted to receive and hold oil. This well communicates with the lower or crank case portion of the housing by means of an opening 25 which is controlled by a manually operable valve 26 so that when a given quantity of oil is accumulated in this well, it may be discharged into this crank case by opening the said valve 26.

The gas is compressed in the cylinder by the piston 27 on its up stroke and opens the valve 21 so as to permit of the discharge of such compressed gas. The latter discharges through the openings 19 and impinges against the cool surface of the walls of the ducts 9. In so doing, any oil which is contained therein condenses upon said surface, flows downwardly into and is retained in the well 24 until it is released to flow into the crank case as before described.

Such cooling action will also remove the superheat from the gas and thus prevent injury and deterioration of parts of the apparatus otherwise affected thereby.

The chamber 12 is provided with a horizontally elongated inlet opening 28, Figs. 2 and 6, and the chamber 13 with a cylindrical outlet opening 29, Fig. 5.

Bolted to the exterior and front of the housing is a control assembly 30, Figs. 2, 7, and 8. This assembly comprises a main body-member 31 preferably consisting of a single casting. This member is formed with a main inlet 32 and a main outlet 33, to which the ends 34 and 35 respectively, of the pipes of the circulating system are connected, as shown in Fig. 7. The inlet 32 communicates with the valve chamber 36 formed in the member 31 which communicates with a bottom chamber 37 through the valve opening 38. This opening is controlled by a manually operable valve 39.

Communicating with the said chamber 37 and below the valve opening 38 is a horizontal duct 40, Figs. 6 and 7, whose inner end registers with the elongated opening 28 of the chamber 12. Interposed between the valve opening 38 and the duct 40 is a mesh screen 41, Fig. 7, which rests upon a removable plug 42 screwed into a bottom opening 43 formed in the member 31. It will be seen that by removing the plug 42 the screen may be readily removed or replaced when required. This screen separates any solid matter which may be contained in the incoming gas and prevents it from entering the chamber 12 and hence the cylinders 15.

In the right side of the member 31, as viewed in Fig. 7, is formed a horizontal duct 44 whose inner end registers with the cylindrical opening 29 of the chamber 13, and the inner end of this duct communicates with a vertical duct 45 whose upper end communicates with a valve chamber 46 and whose lower end communicates with a valve chamber 47, as shown in Fig. 7. The upper opening of this duct 45 is controlled by a manually operable valve 48 and the lower end of said duct is controlled by a spring-actuated relief-valve 49. Below the lower end of said duct 45 is a second horizontal duct 50, Figs. 6, 7, and 8, whose outer end communicates with the chamber 47 and whose inner end communicates with the chamber 12 as shown in Fig. 6.

Formed in the bottom of the member 31 and in alinement with the axis of the valve 49 is an opening 51 closed by a suitable plug and of a size sufficient to permit of the valve being removed therethrough when the said plug is removed from the member 31.

In operating the compressor, the valves 39 and 48 are opened, and the gases from the circulating system pass through the inlet opening 32 into the valve chamber 36, through the valve opening 38, through the screen 41, and then through the horizontal duct 40. From this duct it discharges into the receiving chamber 12, from which it enters the cylinders through the inlet openings 18. This gas is compressed, as before stated, upon the up-stroke of the pistons and ejected through the discharge openings 19 into the enlarged chamber 13 after opening the valves 21. From this chamber it passes out of the opening 29, through the duct 44, and thence out of the outlet opening 33 into the receiving end of the circulating system.

By providing an enlarged chamber, such as 12, surrounding the inlet openings 18, a large body of gas is always present adjacent to these openings, so that on the suction stroke of the pistons the required quantity of gas is readily fed into the interior of the

cylinders. Likewise, by providing an enlarged chamber surrounding the discharge openings 19 of the cylinders, less resistance is met with in the discharge of the gases from the cylinders and such discharge is therefore more readily effected.

In case at any time the circulating system becomes clogged or blocked so that the gases are unable to pass out of the main outlet opening 33, the compressed gas passes through the duct 44 and actuates the relief-valve 49 to open, as a result of which the duct 44 communicates with the duct 50 and the gas passes back into the chamber 12, so that the pump continues to operate and the gas to circulate from the chamber 13 to the chamber 12 and through the cylinders, thereby preventing breakage of the parts.

We have also provided means for extracting the gases from the interior of the compressor when it is necessary to open up the housing for the purpose of repair, which extraction is highly desirable, especially when ammonia gas is used in the refrigerating system. For this purpose, we provide the control assembly 30 with the two horizontal ducts 52 and 53, Fig. 10. The inner ends of these ducts are connected respectively with the chambers 12 and 13. Normally, these ducts are respectively closed upon the exterior with a plug 54 and a valve 55. Duct 53 is connected with a transverse opening 56 normally closed by a plug 57.

When it is desired, after the apparatus has been run for a period of time, to merely inspect the valves 21, valves 39 and 48 are shut off, the plug 57 is removed, and a hose connection made with the opening 56, which may be run out of doors or into water. The valve 55 is then opened, whereupon the gas under compression in the chamber 13 is allowed to escape until the pressure in such chamber is atmospheric. The plug 23 may then be removed and the required inspection made, the quantity of gas remaining in the chamber 13 being so small as to be negligible.

When it is desired to scavenge all of the gas in the compressor, the plug 54 is removed from the duct 52 and the compressor then operated, valves 39 and 48 being of course shut off. Air will therefore enter the duct 52, pass through the chamber 12, the cylinders 15, and the chamber 13, until all of the ammonia gas is removed, such gas, as before, passing out of the hose connection.

Before operating the apparatus again after the ammonia gas has been removed by this air injection, it will be necessary to remove this air, and this is accomplished by making an ammonia connection by opening up the valve 55 and operating the compressor with valve 48 closed until the ammonia gas displaces all of the air within the apparatus after which the valve 55 is closed and the plug 57 replaced.

We have also provided means for disclosing to outside observation the quantity of oil in the crank case. To this end, an opening 58 in the lower part of the housing, as shown in Figs. 2, 11, and 12, is provided. This opening is closed by an oil-sight consisting of a glass plate 59, suitably sealed, which is normally intersected by the plane of the top of the oil supply. The inner end of this opening is obstructed by a downwardly projecting metal plate 60 which is provided with a depressed portion 61 forming a duct communicating at its lower end with the oil supply, and the oil therefore flows from the crank case through the duct and into the space between the plate 60 and the plate 59 so that the level of the latter oil is the same as that of the main body thereof. The plate 60 prevents the agitation of the oil in the crank case due to the churning of the crank and attached parts from being communicated to the space intermediate of the plates 59 and 60 so that this latter body of oil is comparatively quiescent and its level more or less undisturbed by the agitation of the main body.

What we claim is:

1. In a compressor, the combination with an exterior housing comprising a body member and a removable top; of a cylinder within said body member provided with a gas inlet and a gas outlet; said body member being provided with interior walls forming a crank chamber and a chamber separate from said crank chamber communicating with said outlet; said separate chamber being provided with an oil pocket having a valve-controlled outlet discharging into said crank chamber below the lower end of said cylinder.

2. In a compressor, the combination of an exterior housing; a compressor cylinder and piston in the interior of said housing; said cylinder being provided with a suitable gas inlet and a gas outlet; a part of the walls of the exterior housing forming a duct adapted to be utilized for the circulation of cooling fluid; said cylinder outlet being disposed opposite such described portion of the housing walls.

3. In a compressor, the combination of a main housing or body-member and a removable top, the latter being provided with a water-jacket; a portion of the walls of said main body member forming a duct adapted to be used for the circulation of water, said duct being connected with said water-jacket.

4. In a compressor, the combination of a main housing; a cylinder within said housing provided with a gas inlet and a gas outlet; a secondary housing mounted upon said main housing and having a main inlet

and outlet, and a duct communicating with said cylinder inlet and said main inlet; a manually operable valve mounted in said secondary housing and controlling such communication; said secondary housing also having a duct communicating with said cylinder outlet and said main outlet; and a manually operable valve controlling such latter communication.

5. In a compressor, the combination of a main housing; a cylinder within said housing provided with a gas inlet and a gas outlet; a secondary housing mounted upon said main housing and having a main inlet and outlet, and a duct communicating with said cylinder inlet and main inlet; a manually operable valve mounted in said housing and controlling such communication; said secondary housing also having a duct communicating with said cylinder outlet and said main outlet; a manually operable valve controlling such latter communication; said secondary housing being further provided with a second duct communicating with said cylinder inlet and which communicates with the duct communicating with the cylinder outlet, and a normally closed relief valve controlling such last-named communication, whereby independent circulation of gas may be established through said cylinder.

6. A control assembly for compressors or the like, comprising the combination of a housing member provided with a main inlet and a main outlet; an outlet duct communicating with said inlet, an inlet duct communicating with said main outlet, and a second outlet duct communicating with said inlet duct; a manually operable valve controlling communication between said main inlet and first-named outlet duct; a manually operable valve controlling communication between said inlet duct and said main outlet; and a relief valve controlling communication between said inlet duct and second-named outlet duct.

7. A control assembly for compressors or the like, comprising the combination of a housing member provided with a main inlet and a main outlet; a chamber below said inlet, an outlet duct communicating with said chamber, an inlet duct communicating with said main outlet, and a second outlet duct communicating with said inlet duct; a manually operable valve controlling communication between said main inlet and first-named outlet duct; a manually operable valve controlling communication between said inlet duct and said main outlet; a relief valve controlling communication between said inlet duct and second-named outlet duct; and a screen in said chamber interposed between said first-named valve and first-named outlet duct.

8. A control assembly for compressors or the like, comprising the combination of a housing member provided with a main inlet and a main outlet; a chamber below said inlet, an outlet duct communicating with said chamber, an inlet duct communicating with said main outlet, and a second outlet duct communicating with said inlet duct; a manually operable valve controlling communication between said main inlet and first-named outlet duct; a manually operable valve controlling communication between said inlet duct and second-named outlet; a relief valve controlling communication between said inlet duct and second-named outlet duct; and a screen in said chamber interposed between said first-named valve and first-named outlet duct; said screen and relief valve being removable from the bottom portion of said housing member.

9. In a compressor, the combination of a suitable housing; a compressor cylinder mounted in said housing and provided with an inlet and an outlet; valves for controlling the passage of gas to said inlet and from said outlet; a separate duct communicating with said inlet and with the exterior of the compressor and a separate duct communicating with said outlet and with the exterior of the compressor; a removable closure for said first-named duct and a removable closure for said second named duct, and a valve for controlling communication of said second-named duct with the exterior.

Signed by us this 17th day of January, 1924.

FRANCIS E. WRIGHT.
RALPH M. WARNER.