May 4, 1926. 1,583,395

T. DAVIDSON ET AL

WRAPPING MACHINE

Filed May 8, 1922 3 Sheets-Sheet 1

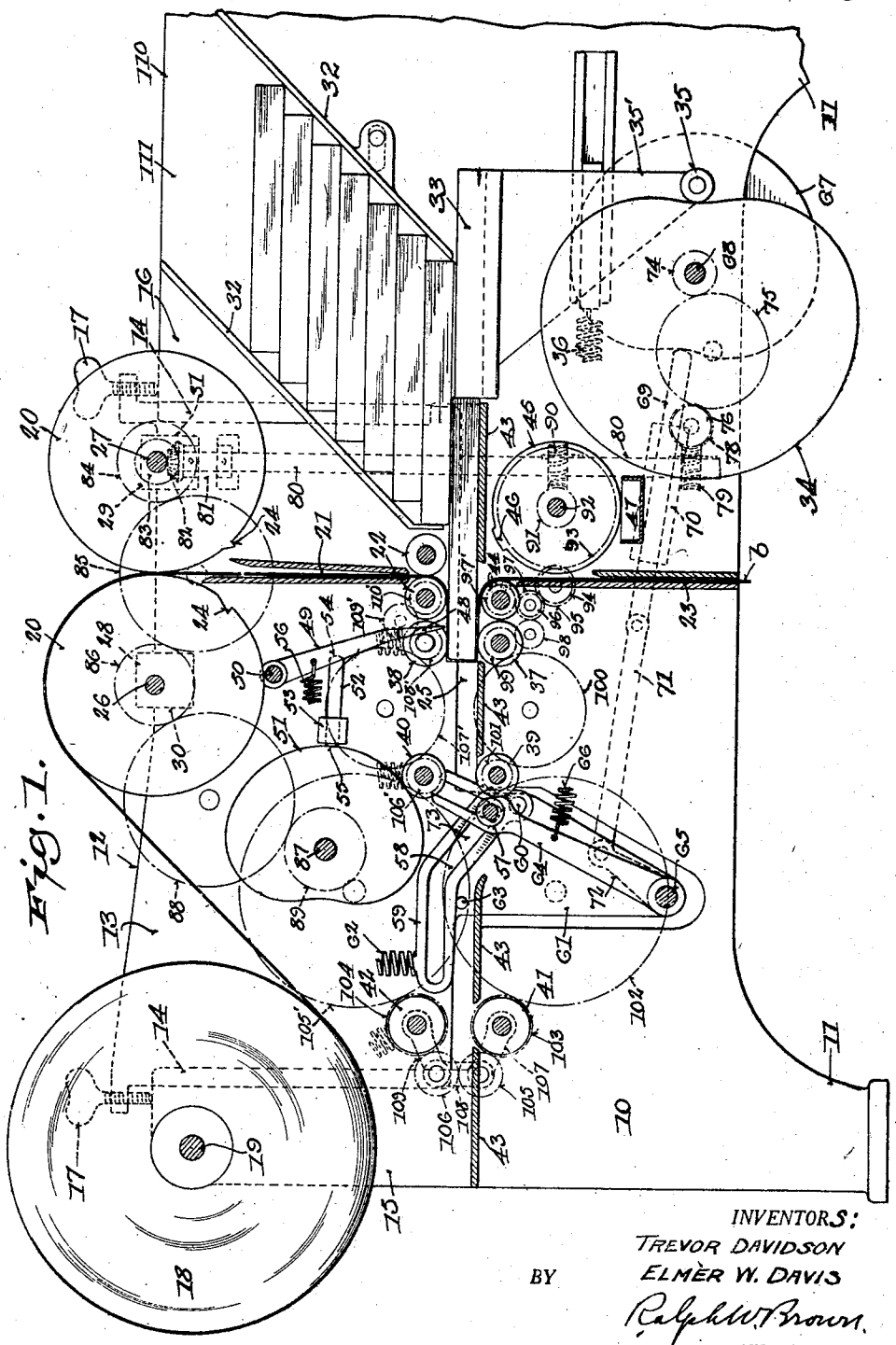

Fig. 1.

INVENTORS:
TREVOR DAVIDSON
ELMER W. DAVIS
BY Ralph W. Brown
ATTORNEY.

May 4, 1926. 1,583,395

T. DAVIDSON ET AL

WRAPPING MACHINE

Filed May 8, 1922 3 Sheets-Sheet 2

Fig. 2.

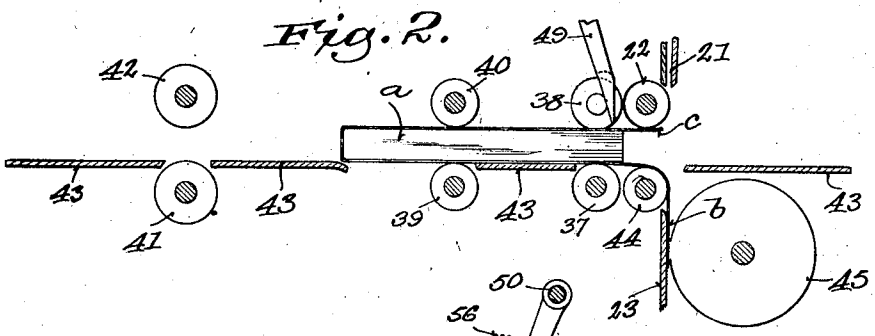

Fig. 3.

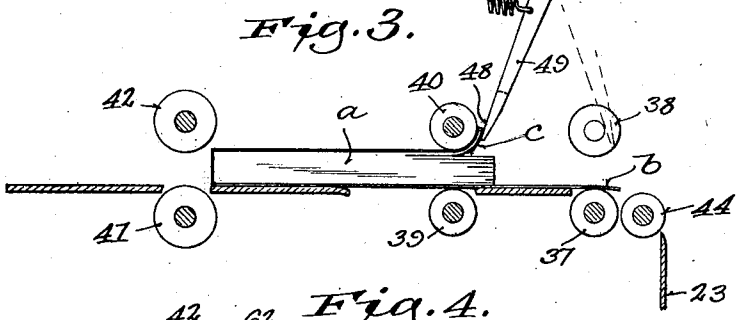

Fig. 4.

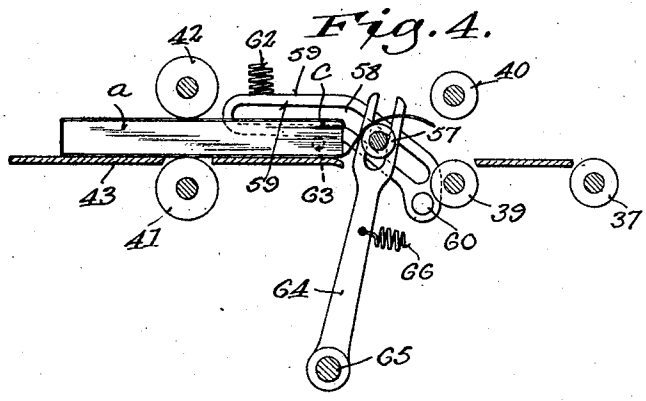

Fig. 5.

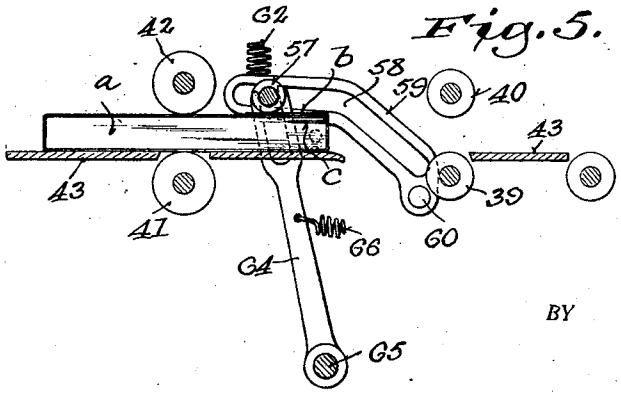

INVENTORS:
TREVOR DAVIDSON
ELMER W. DAVIS
BY Ralph W. Brown
ATTORNEY.

May 4, 1926. 1,583,395

T. DAVIDSON ET AL

WRAPPING MACHINE

Filed May 8, 1922 3 Sheets-Sheet 3

Fig. 6.

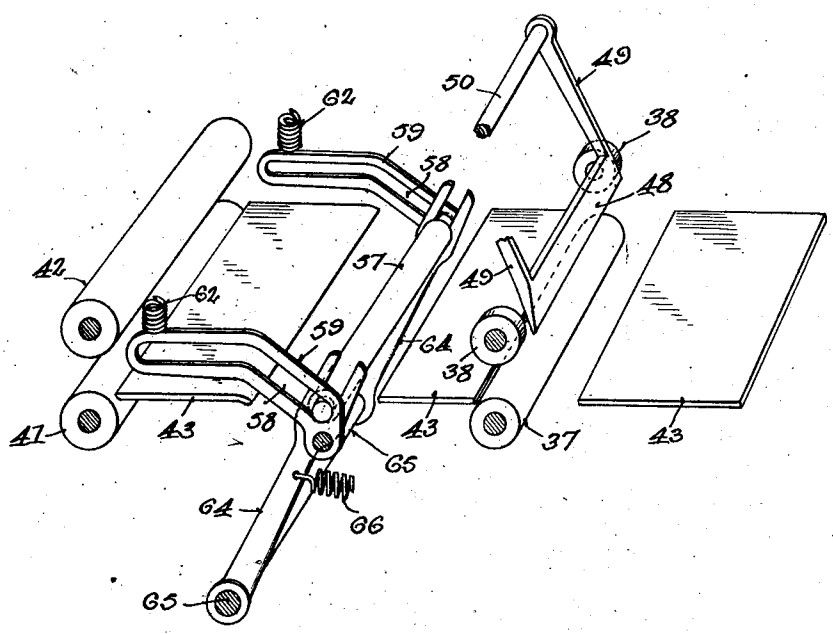

Fig. 7.

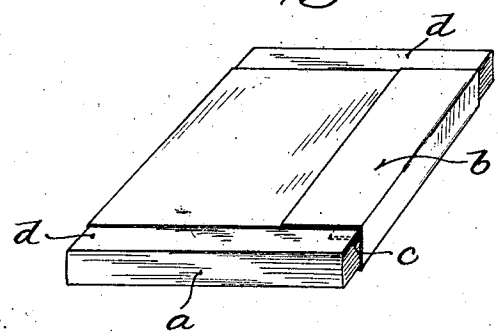

INVENTORS:
TREVOR DAVIDSON
ELMER W. DAVIS
BY Ralph W. Brown
ATTORNEY.

Patented May 4, 1926. 1,583,395

UNITED STATES PATENT OFFICE.

TREVOR DAVIDSON AND ELMER W. DAVIS, OF SOUTH MILWAUKEE, WISCONSIN.

WRAPPING MACHINE.

Application filed May 8, 1922. Serial No. 559,139.

To all whom it may concern:

Be it known that we, TREVOR DAVIDSON and ELMER W. DAVIS, citizens of the United States, residing at South Milwaukee, in the county of Milwaukee and State of Wisconsin, have invented a certain new and useful Improvement in Wrapping Machines, of which the following is a full, clear, concise, and exact description, reference being had to the accompanying drawings, forming a part of this specification.

This invention relates to machines for wrapping magazines.

The general aim of the invention is to simplify and improve the construction and operation of machines of this character.

Other objects and advantages will hereinafter appear.

One embodiment of the present invention is diagrammatically illustrated in the accompanying drawings, in which:

Figure 1 is a longitudinal sectional view of a machine constructed in accordance with the invention and illustrating more or less diagrammatically the character and arrangement of the various parts employed.

Figures 2, 3, 4 and 5 are views diagrammatically illustrating successive stages of a complete wrapping operation.

Figure 6 is a perspective view of the tab inserting and sealing mechanisms employed.

Figure 7 is a perspective view of a magazine embraced in a wrapper applied by the machine of Figure 1.

The machine selected for illustrating is designed to apply a wrapper, such as that shown in Figure 7. This wrapper is in the form of a paper sheet, of a sufficient length to embrace the top and bottom faces, as well as the bound and free edges, of the magazine *a*. One end *b* of the sheet is sealed in the usual manner to the body of the sheet, while the other end *c* is folded into and between the leaves of the magazine to retain the wrapper in position. For purposes of clearness, the ends *b* and *c* will hereinafter be referred to as the sealer and retainer tabs, respectively. The width of the paper sheet is somewhat less than the height of the magazine, so that marginal portions *d* at the top and bottom of the magazine are exposed on either side of the wrapper.

The machine shown includes a base frame 10 mounted upon appropriate legs 11 and supporting an upper frame 12. The upper frame comprises two longitudinally extending side pieces 13, each mounted for vertical adjustment between a pair of guides 14 formed upon appropriate uprights 15 and 16 carried by the base frame. Any suitable means, such as adjusting screws 17, are employed for retaining the side pieces at any fixed position of adjustment.

Paper for the wrappers is supplied from a roll 18 mounted upon the usual center shaft or spindle 19 journaled in and between the uprights 15 at one end of the machine. The paper web from the roll passes up over one of a pair of cooperating feed and cutter rolls 20, and by them is advanced into a vertical guideway 21. The rolls 20 and guideway 21 are carried by and between the side pieces 13 of the upper frame. A pair of feed rolls 22, arranged beneath the guideway 21, advances the paper into a second guideway 23 carried by the base frame. During passage of the paper between the rolls 20, the cooperating cutters 24 carried thereby coact to sever the web into sheets of required length. This cutting action occurs as the advanced end of the web approaches the lower end of the guideway 23, so that the resulting sheet extends in a vertical direction across the horizontal magazine feedway 25, to be later described.

The rolls 20 are carried by shafts 26 and 27, journaled in bearing blocks 28 and 29, removably mounted in appropriate seats 30 and 31, respectively, formed in the side pieces 13. Provision is preferably made for permitting a variation in the relative location of the shafts 26 and 27, so as to permit the use of pairs of rolls 20 of various sizes, and thus provide for cutting paper sheets of various lengths. In this instance, shafts 26 and 27 are eccentrically mounted in the blocks 28 and 29. The arrangement is such that by inverting block 29 shaft 27 is lowered but is retained in its original vertical plane, while by inverting block 28 shaft 26 is lowered and also shifted a corresponding distance toward shaft 27. In this position of adjustment, rolls of somewhat smaller diameter are employed. When it is desired to use rolls of other sizes, other blocks may obviously be substituted for those shown.

The magazines are fed from a stack contained within a chute 110, of a well known type, arranged at the other end of the ma-

chine. The chute 110 is in the form of an open ended receptacle having side walls 111 formed integrally with the uprights 16, and inclined walls 32, constituting plates adjustably secured to and between the side walls 111. A reciprocating feed plate 33, of a well known type, is provided for withdrawing the magazines, one at a time, from the bottom of the stack and advancing them into the feedway 25. The feed plate is actuated by a cam 34 engaging a roller 35 carried by a rigid bracket 35′ secured to the feed plate. A spring 36 acts at all times to keep the roller in engagement with the cam. The feed plate 33 advances each magazine, bound edge foremost, into engagement with and between a feed roll 37 and a pair of laterally spaced feed rollers 38 cooperating therewith. Roll 37 is journaled in the base frame 10 while rollers 38 are journaled in the side pieces 13 of the upper frame. Roll 37 and rollers 38 advance each magazine into engagement with a pair of feed rolls 39 and 40, carried by the base frame and upper frame, respectively, by which the magazines are successively advanced into engagement with and between another pair of feed rolls 41 and 42 carried by the base frame and upper frame, respectively. These sets of feed rolls, together with appropriate intermediate plates 43, carried by the base frame, define the magazine feedway 25 hereinabove referred to.

As each magazine is projected from the base of the stack (see Figure 1), its bound edge is advanced against the vertically disposed paper sheet previously delivered to the guides 21 and 23, in the manner hereinabove described. Then as the magazine advances to and between the roll 37 and rollers 38, it carries the paper sheet with it, the upper portion of the sheet being fed downwardly by the feed rolls 22, while the lower portion is pulled upwardly over a roll 44 as the magazine advances. Roll 44 is mounted in the base frame 10 of the machine and is driven in a clockwise direction, so as to maintain the lower portion of the paper sheet in a taut condition. Rollers 38 do not contact with the paper sheet. They are so spaced as to engage the exposed marginal surfaces *d* of the magazine and are preferably driven at a slightly greater peripheral speed than the rolls 22, so that the upper portion of the paper sheet is maintained in a taut condition. This taut condition of the sheet is maintained after it leaves the feed rolls 22 by the combined action of roll 40 and rollers 38. Roll 40 is somewhat shorter than the width of the sheet so that it engages the sheet only and is driven at a slightly lower peripheral speed than the rollers 38. Thus the magazine, under the influence of rollers 38, tends to advance somewhat faster than the sheet, causing the sheet to be maintained under tension. Thus, as indicated in Figure 2, the sheet is applied in a taut condition over the bound edge and the top and bottom faces of each magazine as it passes between the roll 37 and rollers 38.

An adhesive applying roll 45 is mounted in the base frame 10 beneath the magazine feedway 25 and adjacent the paper guide 23. This roll is provided on its periphery with a longitudinally extending strip or pad 46, arranged to dip into an appropriate adhesive container 47 of well known construction, and to apply adhesive to the sealer tab *b* of the paper sheet. The operation of this roll is so timed that as the lower end of the paper sheet is passing upwardly with the advance of the magazine, the pad 46 contacts therewith and deposits adhesive thereon (see Figure 2).

After the magazine has passed from between the roll 37 and rollers 38 and during its passage between rolls 39 and 40, the end of the upper portion of the paper sheet, constituting the retainer tab, is folded into and between the leaves of the magazine. In the machine shown, this is accomplished by the use of an inserter bar 48, in the form of a straight edged strip carried by a pair of levers 49. These levers are mounted upon a rock shaft 50 journaled in the side pieces 13 of the upper frame at a point above and intermediate the rollers 38 and roll 40. Each lever is actuated from a cam 51 through a plunger 52. Each plunger 52 is reciprocally mounted in an appropriate guide block 53 carried by the upper frame, at one end each plunger engages its lever, as at 54, and at the other end 55 its cam 51. A spring 56 maintains proper interengagement of the levers, plungers and cams. The arrangement is such that the bar 48 is caused to swing back and forth along an arcuate path which dips into the path of travel of the magazines. After the rear or free edge of each magazine leaves the roll 37 and rollers 38, the bar 48 is timed to dip down behind the magazine and to fold the inserter tab *c* over the rear edge thereof. The bar 48 travels somewhat faster than the magazine, so that, as it approaches the end of its working stroke, it engages the upper leaves of the magazine and, cooperating with the roll 40, separates these leaves from the others and inserts the tab *c* therebetween (see Figure 3). When the magazine is again disengaged by the return stroke of the bar, these upturned leaves fall back into their original normal position and the magazine passes on beneath the roll 40.

During the passage of each magazine from rolls 39 and 40 to and between rolls 41 and 42, the sealer tab *b* of the sheet is folded up over the rear edge of the magazine and pressed into sealing contact with the body

of the paper sheet to complete the wrapping operation. In the machine shown, this is accomplished by a roll 57, mounted to travel in angular slots 58, formed in a pair of rock arms 59. The arms 59 are mounted upon a shaft 60 carried by and between depending brackets 61 carried by the side pieces 13 of the upper frame. The free end of each arm is yieldably pressed downwardly by a spring 62, suitable stops 63 being provided for limiting the downward movement thereof.

Roll 57 is actuated back and forth along the slots 58 by a pair of forked levers 64 fixed to a rock shaft 65 journaled in and between the depending brackets 61. A suitable spring 66 tends at all times to retain the levers 64 in the position shown in Figure 1, in which position the roll 57 is beneath the magazine feedway 25. A cam 67 is employed for intermittently swinging the levers 64 to the position shown in Figure 5. This cam is carried and driven by the shaft 68, which also carries and drives the cam 34 hereinabove referred to. A plunger 69, reciprocally mounted in a fixed block 70, engages the cam 67 at one end and at its other end is connected to a link 71, which in turn is connected to a lever arm 72 fixed to the rock shaft 65.

The arrangement is such that after the rear edge of the magazine leaves the rolls 39 and 40, the forked levers 64 are actuated to cause the roll 57 to travel upwardly along the inclined portions 73 of the slots 58. During this movement, the end of the paper sheet constituting the sealer tab *b* is folded upwardly against the rear edge of the magazine by the roll 57. The roll 57 travels somewhat faster than the magazine and by its engagement with the rear edge therefor is caused to climb up over the upper corner and onto the upper face thereof. In doing so, it lifts the rock arms 59 against the pressure of their springs 62. Thus, as the roll 57 continues to advance relative to the magazine, the tab *b* is pressed downwardly into sealing contact with the upper portion of the wrapper previously applied. (See Figure 5.) The roll 57 and levers 64 are finally returned to their normal position by the spring 66, the rock arms returning to their lowermost position under the action of their springs 62 when the roll 57 is disengaged from the magazine.

The rolls, cams, etc., hereinabove described may be driven in various ways. In this instance, power is applied to the machine through the shaft 68. As above pointed out, this shaft drives the cams 67 and 34. Through spur gears 74, 75, 76 and 77, and spiral gears 78 and 79, power is transmitted to a vertical shaft 80. Shaft 80 is supported in bearings 81 in the upper frame of the machine and is splined through the spiral gear 79, to permit the desired vertical adjustment of the upper frame relative to the base frame.

Shaft 80 drives the shaft 27 through appropriate bevel gears 82 and 83, while shaft 26 is driven from shaft 27 through gears 84, 85 and 86. Cams 51 are driven by their supporting shaft 87 which in turn is driven from gear 86 through gears 88 and 89.

Another spiral gear 90 splined on the shaft 80 and meshing with a spiral gear 91 drives the shaft 92 of the roll 45. Roll 44 is driven from shaft 92 through the gears 93, 94, 95, 96 and 97, while roll 37 is driven from gear 96 through gears 98 and 99. Roll 39 is driven from gear 99 through gears 100 and 101 and roll 41 from gear 101 through gears 102 and 103.

Roll 42 is driven by a gear 104 carried by the upper frame and mechanically connected with the gear 103 through gears 105 and 106 retained in intermeshing relation by links 107, 108 and 109. Roll 40 is driven from gear 104 through gears 105′ and 106′, while one of the rollers 38 is driven from gear 106′ through gears 107′ and 108′. Roll 22 is driven from gear 108′ through gears 109 and 110 and in turn serves to drive the other roller 38 through appropriate gearing.

Various changes may be made in the embodiment of the invention hereinabove specifically described, without departing from or sacrificing any of the advantages of the invention as defined in the appended claims.

We claim:

1. A wrapping machine having a feedway along which articles are advanced, means for positioning a wrapping sheet across said feedway to cause said sheet to embrace the article by the advance thereof against the sheet, sheet tensioning means disposed in said feedway and operable to tension the sheet during the embracing action, and oscillating means to separate parts of the article and to insert one end of said sheet therebetween.

2. A wrapping machine having means for advancing articles to be wrapped along a predetermined path, means for positioning a wrapping sheet across said path in advance of each article thereby causing the sheet to embrace the article by the advance thereof, and rollers disposed in said path to tension the sheet during the embracing action.

3. A wrapping machine having means for advancing a sheet along a predetermined path, means for directing an article to be wrapped against said sheet intermediate the ends thereof to cause the sheet to embrace the article, and unitary means to simultaneously separate parts of the article and to insert one end of said sheet therebetween.

4. A wrapping machine having means for directing a sheet along a predetermined path, means for directing an article to be wrapped against the sheet intermediate the

ends thereof to deflect the sheet from its path and thus cause the sheet to embrace the article, means for tensioning said sheet during the embracing action, and means including a guided roller operable along a predetermined path to press the free end of said wrapper into sealing contact with the body of the wrapper.

5. In a magazine wrapping machine, the combination of means for feeding magazines successively along a predetermined path, means for applying a wrapping sheet to each magazine so that the free ends of the sheet project beyond the free edge of the magazine, oscillating means for inserting one end of the sheet so applied between the leaves of the magazine, and means for folding the other end of the sheet over the free edge of the magazine and into sealing contact with the body of the sheet to complete the wrapper.

6. In a magazine wrapping machine, the combination of means for applying a wrapping sheet to a magazine, unitary means for separating the leaves of the magazine and inserting one end of the sheet therebetween, and means for securing the other end of the sheet to the body of the sheet to complete the wrapper.

7. In a magazine wrapping machine, the combination of means for applying a wrapping sheet to a magazine, magazine advancing rolls, means including a reciprocating bar cooperating with one of said rolls for separating the leaves of the magazine and inserting one end of the sheet therebetween, and means for securing the other end of the sheet to the body of the sheet to complete the wrapper.

8. In a magazine wrapping machine, the combination of a base frame, an upper frame, mechanism carried by each of said frames cooperating to apply a wrapper to a magazine, and means for effecting a relative adjustment between said frames to accommodate said machine to magazines of various thicknesses.

9. In a wrapping machine means for advancing an article to be wrapped in one direction only along a predetermined path, means for applying a wrapping sheet thereto during said advance, and reciprocating means for folding and pressing one end of said sheet into sealing contact with the body of the sheet during said advance.

10. A wrapping machine having a feedway along which the articles to be wrapped are advanced in one direction only, means for positioning a wrapping sheet across said feedway to cause the sheet to embrace the article by the advance thereof, and means movable across said feedway for pressing one end of said sheet into sealing contact with the body of the sheet during said advance.

11. In a wrapping machine the combination of means for effecting a substantially continuous advance of an article to be wrapped along a predetermined path, means for applying a wrapping sheet about one edge thereof during such advance, means independent of said advancing means for inserting one end of said sheet into the opposite edge of said article and means for pressing the other end of the sheet into sealing contact with the body of the sheet during such advance.

12. A wrapping machine having means for directing a sheet along a predetermined path, means for directing an article to be wrapped against the sheet to cause the sheet to embrace the article by the advance thereof, and article advancing means comprising cooperating feed rollers arranged to grip the ends of said article beyond the wrapper only.

In witness whereof, we hereunto subscribe our names this 3rd day of May, 1922.

TREVOR DAVIDSON.
ELMER W. DAVIS.