Sept. 8, 1925. **1,552,541**

C. H. CLARK

SKATE

Filed Feb. 7, 1923 3 Sheets-Sheet 1

Fig. 1.

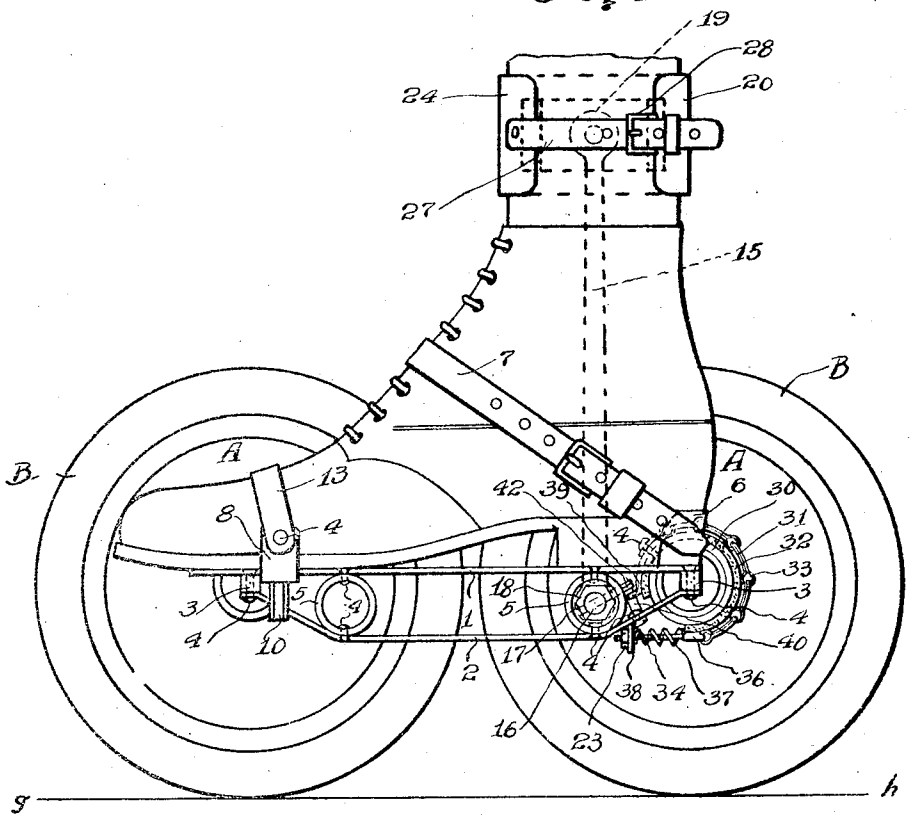

Fig. 2.

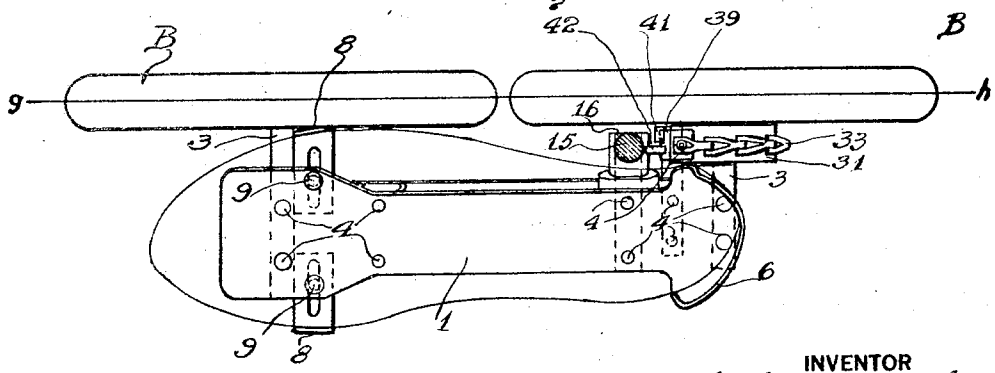

INVENTOR

Charles H. Clark

Sept. 8, 1925. 1,552,541

C. H. CLARK

SKATE

Filed Feb. 7, 1923 3 Sheets-Sheet 2

Fig. 3.

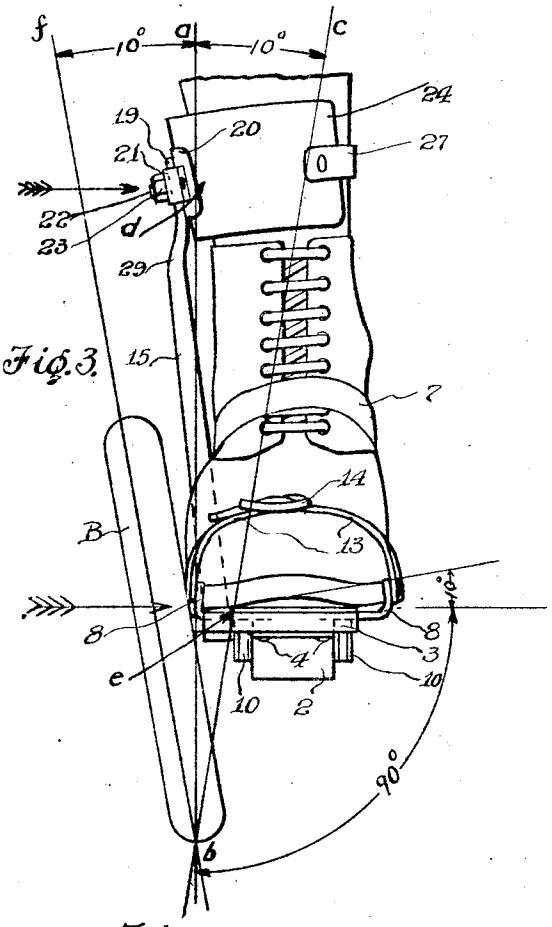

Fig. 4.

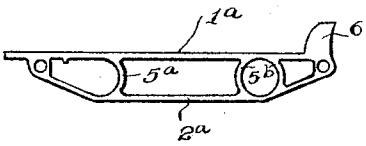

Fig. 5.

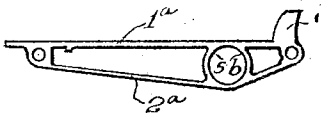

Fig. 6.

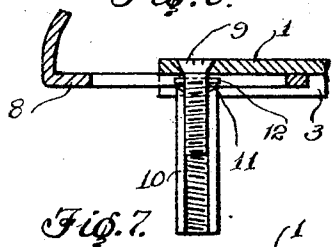

Fig. 7.

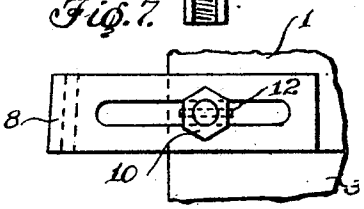

Fig. 10.

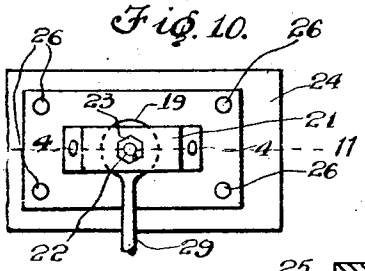

Fig. 8.

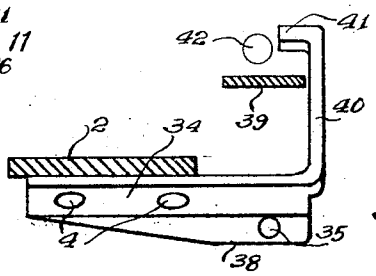

Fig. 9.

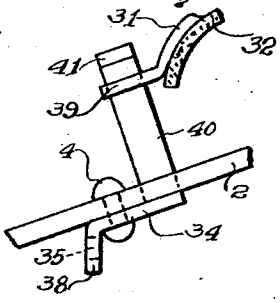

Fig. 11.

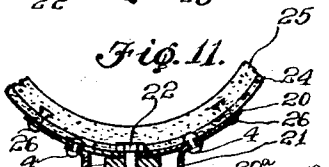

Fig. 12.

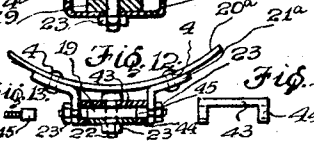

Fig. 13.

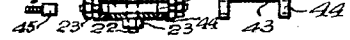

Fig. 14.

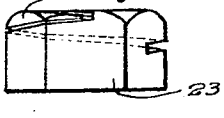

Fig. 15.

INVENTOR

Charles H. Clark

Sept. 8, 1925.

C. H. CLARK

SKATE

Filed Feb. 7, 1923

1,552,541

3 Sheets-Sheet 3

Fig. 17.

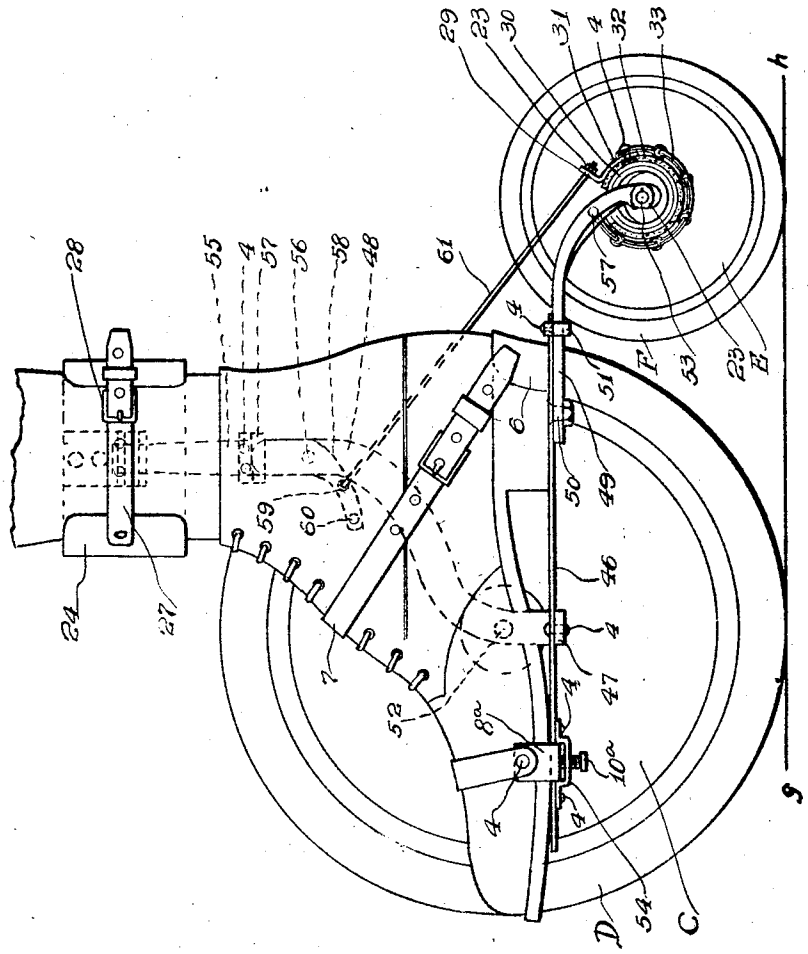

Fig. 16.

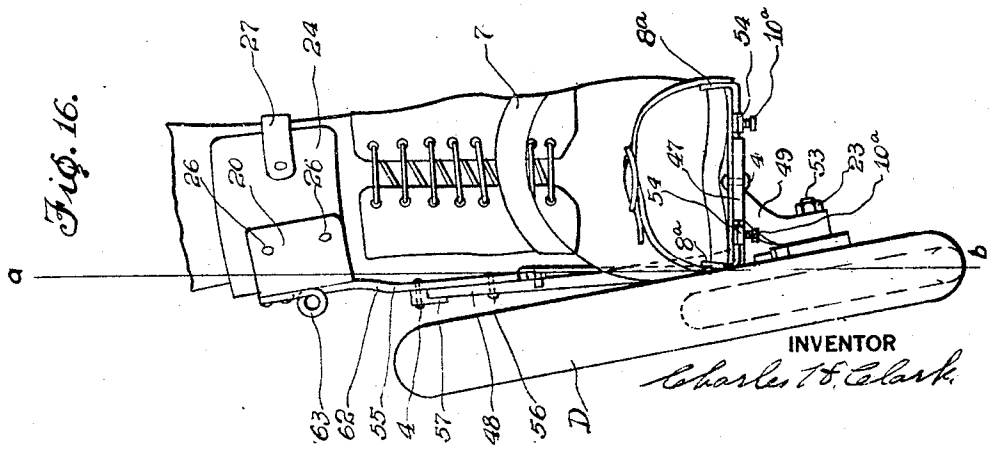

INVENTOR

Charles H. Clark

Patented Sept. 8, 1925. 1,552,541

UNITED STATES PATENT OFFICE.

CHARLES HASKELL CLARK, OF NEW YORK, N. Y.

SKATE.

Application filed February 7, 1923. Serial No. 617,498.

To all whom it may concern:

Be it known that I, CHARLES H. CLARK, a citizen of the United States, residing at New York, in the county of New York and State of New York, have invented certain new and useful Improvements in Skates, of which the following is a specification.

The present invention relates to roller skates of the type having at least one wheel of large diameter extending well above the upper surface of the foot-plate or sole plate. Skates of this general type, while in general providing easy riding qualities, involve many problems which must be overcome to obtain an approximation of perfection and satisfactory results, and many attempts to provide such a type of skate and to solve the problems inherent therein, in different ways, have been made. One such effort is set forth in my Patent No. 1,379,250 granted May 24, 1921, and skates I have manufactured according to the construction set forth in said patent have given excellent results, but an objection to them lies in the fact that they are not suited to use by a novice, but require that the skater shall first have learned to skate, or, put differently, they require skill to operate, and their use and market are thus restricted.

The object of the present invention, broadly stated, is to solve the problems involved in such a manner as to provide a skate of this general type which does not require previous skating and special skill to operate, but may be used as easily as any other skate by the rankest novice with at least as good results and greater satisfaction, and also to, by the hereinafter set forth construction, avoid objectionable features heretofore present in the previous constructions, including the construction set forth in my above referred to patent.

More specifically stated, the objects of my present invention are to provide a skate having wheels on one side only and in which the distance of the foot-plate or sole-plate from the ground with relation to the point of attachment of the foot-brace to the leg is such as to greatly reduce the sidewise pressure exerted by the brace upon the leg at such point of attachment of the brace; to provide a skate having wheels on only one side and which will not exert undue pressure upon the leg and will avoid any chance of the wheels of the two skates of the pair in use from striking against, or catching in, each other; to provide a skate having wheels on only one side and so mounted as to track, though it is not vital to my invention, considered in its broader aspects, that the wheels should track; to provide a skate of this type having its wheels slightly inclined to the vertical, though this feature of inclination of the wheels is not vital to my invention when considered in its broader aspects; to provide a skate of this type wherein the line of application of pressure to the wheel treads will be at an angle, not substantially in excess of ten degrees, to a line intersecting the point of application of pressure by said leg brace to the side of the leg and a longitudinal line intersecting the points of contact of the two wheel tires with the road, or street, or rink surface; to provide a skate of this type in which longitudinal rocking of the foot-plate with relation to the axes of the wheels is eliminated; to provide in combination with this type of skate a sensitive brake mechanism which will be set by an unusual pointing of the toe with relation to the leg, such pointing being accomplished by a forward movement of the leg with relation to the body while both wheels of the skate are in contact with the ground, such brake automatically tightening up its grip and being automatically released to greater or less degree, in case the brake be applied too abruptly, by the forward momentum of the body overrunning the leg; to provide a skate of this type of which the wheels will be substantially perpendicular to the road surface during the latter portion of a skating stroke to sustain the load which is greater at this time than during any other portion of the skating stroke; to provide a skate of this type of which the wheels will be substantially perpendicular during that portion of the stroke in which the tires are subjected to the greatest amount of side thrust; to provide a skate of this type of which the tires of the wheels when placed under the greatest load and side-thrust of the skating stroke is substantially vertical and free to flex without rim obstruction and thus free from conditions tending to increase its rolling friction; and to provide a journaled brace cuff or band which permits the ankle and the skate to be rocked trans-

versely of the skate so as to reduce and even entirely eliminate the brace strain if desired, all of which objects are accomplished by the construction, combination and arrangement of parts all as hereinafter set forth, described and claimed.

Skates which have wheels mounted only on the outer side will function in traveling and steering very much the same as an ice skate, but will naturally have a tendency to tip to the inside, this tendency being governed or offset by the point at which the pressure is applied to the foot-plate and the plane of the wheels, and the operation of the leg brace. Likewise, the amount of force or strain exerted laterally on the leg by the brace in overcoming this inward tipping tendency depends on the degree of inclination of the wheels with relation to a vertical plane, and the height of the foot-plate from the ground with relation to the distance from the ground of the point of attachment of the brace to the leg. It follows that a skater, standing still on one skate of this type, will be obliged to lean outward over the skate to a much greater degree than with a skate which is balanced.

Also, as aiding to a better understanding of the invention, it should be borne in mind that at the start of a stroke the skater's body will be slightly inclined toward that leg with which the stroke is taken, so that the wheels will be at their greater degree of inclination, and that at such time the skater drops his body toward the skate and, as the stroke progresses, he swings his body progressively toward the other side and also pushes his body away from the skate to give force to the stroke. This is the normal skating movement. From its consideration it will be apparent that the wheels and tires are subjected to the lightest load and side thrust at the beginning of the stroke when the wheels are most inclined, the load and side-thrust progressively increasing as the wheels, of a skate according to my present invention, progressively approach the perpendicular until the last portion of the stroke is reached, when the greatest downward and side thrust is exerted by the leg and body and the wheels and tires are perpendicular and best able to sustain the maximum load and side thrust.

In the accompanying drawings:

Figure 1 represents a side elevation of a skate embodying my invention shown as applied to a skater's leg;

Figure 2, a top plan view of the skate illustrated in Figure 1, the out-line of the skater's foot being indicated;

Figure 3, a front elevation of the representation of Figure 1;

Figure 4, a modified form of frame designed for manufacture by casting;

Figure 5, a further modified form of frame, for a smaller size skate, also designed for manufacture by casting;

Figure 6, a sectional detail view, on an enlarged scale, of one of the toe-clamps and associated parts;

Figure 7, a bottom plan view of the structure shown in Fig. 6;

Figure 8, a rear elevation of the bracket 34 with its arm 40 and stop-finger 41, the lower plate 2 of the skate frame to which the bracket is riveted being indicated in section and the brake operating lever or pin 42 and the cooperating flange or lip 39 of the brake band being indicated in normal relation, the former in end elevation, the latter in section;

Figure 9, a side elevation of the structure shown in Fig. 8, omitting, however, the brake operating lever or pin, and adding an illustration of a portion of the brake-lining;

Figure 10, a detail side elevation of the ankle or brace cuff connection with the brace;

Figure 11, a sectional view on the line 11—11 of Figure 10;

Figures 12, 13 and 14, detail views of a modified form of joint or connection between the brace and its cuff;

Figure 15, a detail side elevation of a lock-nut 23, on an enlarged scale, such as used in the above illustrated joint and elsewhere in the skate of this invention;

Figure 16, a side elevation of a modified form of skate embodying my invention; and

Figure 17, a front elevation of the modified form of skate shown in Figure 16.

In skates of the type forming the subject matter of this invention it is found that the smaller the angle between a line, hereinafter referred to as the line of pressure or pressure line, intersecting the point of application of pressure or force to the foot-plate and a line intersecting the points of contact of the wheels with the ground, and a line, hereinafter referred to as the line of gravity, intersecting the point of gravity of the skater's body and a line intersecting the points of contact of the wheels with the ground, the smaller will be the inclination of the skate to tip sidewise, as thereby the lateral pressure will be decreased. Likewise, it is to be recognized that the angle between these two lines will increase and decrease in accordance with the distance from the ground of the point of application of pressure with relation to the distance from the ground of the point of attachment of the brace to the leg. Also, it is obvious that the greater the inclination of the wheels is to a vertical plane the greater will be the end thrust on the wheel bearings, with consequent increase in friction and

leverage, so that any undue inclination of the wheels is to be avoided.

Likewise, it is to be recognized that a line extending lengthwise through the center of a skater's leg will extend at an angle of approximately eight degrees to the gravity line, the angle between these two lines being hereinafter referred to as the leg angle.

In developing my present invention I have recognized the above facts and have sought to harmonize them in such manner as to obtain the least lateral leverage, thus reducing the tendency to tip sidewise, with the least degree of inclination of the wheels, and to decrease the pressure exerted by the brace laterally inwardly against the skater's leg, making use of the leg-angle to force the foot-plate over toward the wheels to bring the point of application of foot-pressure as near to the line of gravity as possible with the degree of inclination of wheels shown, and to minimize the end-thrust and friction exerted upon the wheel bearings and to provide a skate of which the wheels will be perpendicular and the tires subjected to the least side-thrust when under the heaviest load, which occurs during the latter portion of the skating stroke.

By way of illustration and as applied to an embodiment of my invention according to Figures 1, 2 and 3, I have indicated on Figure 3 the lines of gravity and application of pressure, and also the line of inclination of the wheels and a line extending at right angles thereto through the axes of the wheels to indicate the angle of the surface of the foot plate illustrated with relation to the inclined plane of the wheels and also as indicating a plane in which the foot-plate surface might be located with a given form of brace.

Referring to Figure 3, the line *a—b* represents a line passing through the center of gravity of the skater's body and through a line, line *g—h* of Figs. 1 and 2, intersecting the points of contact of the wheels with the ground. This line *a—b*, the gravity line, is vertical when the skater stands on one skate and is not in motion, but since the body is usually in motion, swinging from side to side, the gravity line *a—b* is not usually vertical and does not even have a fixed position relative to the leg with which the stroke is taken, although the leg is generally about in the position relative to the line *a—b* as shown in Fig. 3.

The line *b—c* intersecting the point *e* of pressure and the line *g—h* represents the line of application of pressure or load or force.

The line *b—f* intersecting the line *g—h* and extending parallel to the sides of the wheel tires indicates the line or plane of inclination of the wheels to the vertical and with relation to the foot-plate which is illustrated as horizontal in its position in Figures 1, 2 and 3.

As indicated, the line *b—c* extends inwardly and upwardly at an angle of ten degrees to the line *a—b* and the line *b—f* extends outwardly and upwardly at an angle of ten degrees to the line *a—b*.

It will be readily appreciated that if the point of application of pressure, indicated at *e*, were moved down closer to the ground, the angle between line *a—b* and line *b—c* would increase proportionally as the point *e* approaches the ground, it not being feasible to shift the point *e* over laterally closer to line *a—b* without multiplying the degree of inclination of line *b—f*, resulting in rapid progressive increase of end-thrust and friction on the wheel bearings.

Assuming that the relation between the lines of application of pressure and of gravity are as shown in Fig. 3 and that the skater weighs one hundred pounds, the side-thrust at *e* will be but approximately 17 pounds, or only approximately 5.7 pounds at the point of application of pressure or strain by the brace to the leg, as the latter point is approximately three times further from the line *g—h* in a vertical direction than is the plane of point *e*. If the point *e* is lowered the brace thrust or strain rapidly increases due to the increase of the angle between line *a—b* and line *b—c*, and I have found that the minimum distance the point *e* should be from the ground, in a construction embodying my invention, is equal to approximately the distance from the heel of the skater's shoe to his ankle joint. This distance depends upon the size of the skater's foot, but it ranges from three to four inches. However, the higher, within reason, the point *e* is from the ground the closer it will be to the gravity line and the smaller will be the angle between the gravity line and the pressure line.

While a ten degree tilt between the wheels and the foot-plate is illustrated, this exact degree of tilt or inclination is not essential, it being recognized that the skater by rocking his ankle can cause the skate to rock at least ten degrees each way transversely from the position indicated in Figure 3. This is due to the fact that the top of the brace is secured to the leg above the ankle and may be forced over laterally either way as the foot is moved over by the rocking of the ankle. However, wheels which are inclined much more than ten degrees will not run well because of the increased end thrust and friction on the wheel bearings and side-thrust on the tire increasing its coefficient of rolling friction, so that such increase in inclination should be made to occur preferably during the beginning of the skating stroke when the load and side-thrust are

least. Also, if the wheels of the skate be inclined at a maximum of less than approximately eight degrees during the skating stroke the angle between the gravity line anl pressure line will rapidly increase, rapidly increasing the brace strain, it being noted that such decrease of angle of inclination would result in moving the point *e* laterally inwardly away from the line *a—b*.

Rocking the skate so as to increase the inclination of the wheels will move the point *e* over near the line *a—b*, decreasing the angle between the lines *a—b* and *b—c* and so will decrease the brace strain to whatever point desired, or entirely eliminate it but, however, only at the cost of increased friction and end thrust on the bearings and side thrust on the tires and is useful in steering.

I have shown the foot-plate 1 at a right angle to the gravity line *a—b* when the wheels are tilted ten degrees to said line, or dropped down ten degrees from a horizontal line, such construction resulting in displacing the upper portion of the wheels and allowing the skater's foot to be forced over further toward the wheels so as to bring the point *e* closer to the line *a—b*. However, while this construction is decidedly preferable as a fixed form, it is not essential since said foot-plate 1 can be placed at any angle the skater wishes and yet not materially affect the slant of the wheels relative to line *a—b* with a given shaped brace. This is due to the fact that it is the brace, rather than the foot-plate, which determines the slant of the wheels relative to line *a—b* and to the leg, therefore the foot-plate might be arranged at right angles to the plane of the wheels, as I have indicated in Fig. 3 by the ten degree angle through the foot-plate 1. The foot will automatically adjust itself, within reasonable limits, to various angles even without necessitating a rocking of the ankle.

Referring now in detail to the drawings, the skate frame consists of a foot-plate 1, a lower or bottom strut brace plate 2, axles 3 fixedly secured to the plates at, and between, the respective end portions of said plates 1 and 2 by rivets or other suitable means 4 passing through said plates and the intervening portions of the respective axles 3, these plates 1 and 2 being spaced from each other by said axles 3 and by tubular braces and spacers 5 also secured in position by rivets or other suitable means 4.

Disc wheels A having hubs 6 provided with suitable anti-friction bearings are mounted on the respective axles 3 to have free rotation thereon, suitable means for retaining said wheels A on their respective axles being provided. Said wheels A, provided with cushion, preferably pneumatic, tires B, are preferably mounted at an angle of approximately ten degrees to the vertical, as shown, and the foot-plate 1 is preferably arranged so as to lie in an approximately horizontal plane when the wheels A are standing in normal position at approximately ten degrees to a vertical plane. The elements of the foregoing structure of the frame may be of any suitable material, pressed steel, forgings or castings, and the skate frame as a whole may be a built-up structure as above described, or an integral forging or casting.

The foot-plate 1 is provided with a heel-plate 6, which may be either integral with the plate 1 or fixedly secured thereto. An ankle strap 7 is secured to said heel-plate 6 and is provided with the usual buckle and holes for drawing the strap tight across the instep to hold the heel firmly in position, all as usual.

Adjustable toe-clamps 8, guided by the adjacent side of the front axle 3, are provided for individual adjustment slidably laterally and are held in adjusted position by means of the screws 9 and long sleeve-like nuts 10 having upper ends 11 hardened and formed with cutting edges for biting into and gripping the respective clamp members 8, the nuts 10 having their external faces angular in cross-section preferably for their full length to facilitate ease of grip for adjustment, and the respective screws 9 being held against turning by cross-pins 12 mounted in them so as to lie in the usual slots of the respective clamps 8. Short straps 13 are connected to the upwardly turned outer ends of the respective toe-clamps 8 by rivets 4 and are to be connected together by the buckle 14 and drawn tight so as to hold the toe firmly in position and relieve the toe of the skater's shoe of strain it would otherwise have to sustain unaided.

The brace 15 is provided at its lower end with a shaft 16 extending inward at right angles thereto and journaled in bearing 17 held in the rear tubular spacing brace 5 by ends of rivets 4, a lock-nut 18 being screwed on the inner end of shaft 16 so as to hold the same in position in its bearing 17 while leaving it free for partial rotation in said bearing.

The upper end of brace 15 is spread to form a wide pressure plate 19, the latter being perforated and received between curved metallic plate 20 and metallic bracket 21 secured to plate 20 by rivets 4 or any other suitable means, a short bolt 22 having its head on the inside of plate 20 protruding outwardly through said plate 20, bracket 21 and the intervening pressure plate 19 and receiving a lock-nut 23 on its outer screw-threaded end.

The plate 20 is secured to the usual leather brace cuff or band 24 with its usual pad lining 25 by clinched rivets 26 or any other

suitable means. The usual strap 27 and buckle 28 secured to the respective end portions of the leather cuff or band 24 will serve to draw and hold the latter tightly about the skater's leg above his ankle.

The upper portion of the brace 16 is bent abruptly inward or stepped in as at 29 toward the leg in order that while the pressure plate 19 may be strapped tightly against the leg, the remainder of the brace 15 will be held spaced away from the skater's leg and ankle in order to hold the wheels A at the proper inclination relative to the leg and to provide clearance so that the ankle and foot may be rocked to obtain the desired variation in the position of the wheels A relative to a vertical plane and the line of gravity and to vary the side strain or pressure of the plate 19 against the skater's leg, by varying the angle between the lines of pressure and of gravity.

A brake-drum 30 is mounted upon the inner face of, and extends inwardly concentric with the hub of, the rear wheel A. Surrounding the brake-drum 30 is the split brake-band 31, provided with the usual brake-lining 32 gripping upon the brake-drum 30, and reinforced with the chain 33 having its upper end secured thereto by rivet 4. A bracket 34 is riveted by rivets 4 to the lower face of plate 2 just to the rear of rear tubular brace 5 and has its flange 38 provided with a perforation 35. A bolt 36, having its head connected in the adjacent lower end of chain 33, extends through perforation 35 and receives a lock-nut 23 on its screw-threaded end, said lock-nut 23 serving also to adjust the grip of the brake. A spring 37 bearing with its respective ends against said flange 38 and the head of the bolt 36 serves to prevent rattling of the bolt 36 when the brake is free.

The upper and forward end of brake-band 31 is provided with an abrupt flange or lip 39 and the bracket 34 has an arm 40 extending upwardly and forwardly between said rear wheel A and the skate frame and a finger 41 extends laterally inwardly from the upper end of this arm 40 so as to overlie flange 39 and to be engaged by the latter when the brake is free to prevent the brake from slipping off of the brake-drum 30 and to hold said flange 39 in position to be engaged by the finger or lever 42 to set the brake in case of need.

Short brake lever or pin or finger 42 extends slantingly upwardly and rearwardly from shaft 16 and normally overlies the flange or lip 39 in such position that an unusual rearward partial rotation of said shaft 16 will cause such pin or lever 42 to press against said flange or lip 42 to draw the brake-band 31 up tight and so apply the brake.

To apply the brake the foot is pushed forward, increasing the angle between the toe and leg and pointing the toe to an unusual degree, causing the brace 15 to swing rearwardly, causing an unusual rearward partial rotation of the shaft 16, bringing the lever or pin 42 into engagement with the flange or lip 39 and moving the latter forward about the brake-drum 30, causing the brake-lining 32 to grip the brake-drum 30. Inasmuch as the brake-drum 30 is rotating in the direction of the movement of the lip or flange 39, but a very slight movement of the latter is necessary to apply the brake, as the action of the surface of the brake-drum 30, once the brake begins to function, will tend automatically to draw the brake-lining 32 into tighter contact with the brake-drum 30. An increase of the angle between the toe and the leg will normally occur during practically each normal skating stroke with a skate of this type and therefore, it is necessary to provide a construction whereby only an unusual increase of the angle between the leg and toe will suffice to apply the brake, while at the same time providing a brake construction that will take hold quickly and effectively in case of emergency. For this reason I provide an appreciable interval between the lever 42 and the lip or flange 39, allowing the shaft 16 to rock slightly in its bearing 17 without in any manner affecting the brake, and provide a brake structure of which the braking action will be automatically increased once it is put in operation. In case the brake should grip too suddenly it is obvious that the force of momentum would carry the body of the skater forward, overrunning his previously advanced leg so that the angle between his toe and leg would be decreased, rocking the shaft 16 partially forward and the brake would thereby automatically be released, wholly or partially, according to the circumstances.

The modified from of frame illustrated in Figure 4 is designed to be cast as an integral part and has a foot-plate 1^a, a web or strut 2^a, a reinforcing rib 5^a and reinforcing webs 5^b which, together with portions of the foot-plate 1^a and web or strut 2^a define an opening to receive the bearing 17 for shaft 16 of brace 15. It also has a heel plate 6 integral with foot-plate 1^a and is provided with perforations in which the axles are to be fixedly secured.

The modified form of frame illustrated in Figure 5 is the same as that shown in Figure 4, except that it is intended for a smaller skate for a smaller lighter person, and, because it is shorter and not subject to as much weight, bracing rib 5^a of the modification shown in Figure 4 is omitted and the strut or web 2^b is carried on a straight slanting line from the forward end portion back to the brace 5^b.

The lock-nuts 23 are made according to

the construction shown on an enlarged scale in Figure 15 and have a tapered spiral section 23ᵃ extending nearly around the nut and from the top thereof. This spiral section 23ᵃ is bent downwardly throughout its entire length and is thus forced strongly against the bolt threads for its entire length rather than at any one particular point, which would cause it to wear away, moreover, a bent section of this shape and length has plenty of spring in it to keep it from taking a permanent set.

In Figures 12, 13 and 14 I have shown a modified form of connection, providing a universal joint, between the cuff and brace 15. In this modification 20ᵃ indicates the plate fastened by rivets 26 to the above described leather cuff 24 and pad 25. To this plate the brackets 21ᵃ are riveted by rivets 4, and the perforated plate 43 having cylindrical end collars 44 is located between these brackets 21ᵃ and held in place therebetween by means of cylindrical blocks 45 fitting freely in said end collars 44 and having screw-threaded stems extending through the respective brackets 21ᵃ and receiving lock-nuts 23. A bolt 22 passes through the perforation in plate 43 and the perforation in pressure plate 19 and receives a lock-nut 23 on its screw-threaded end. The head of said bolt 22 is in engagement with the inner face of plate 43 and lies between said plate 43 and plate 20ᵃ.

In Figures 16 and 17 I have shown a modified form of this type of skate, which modified form is adapted to sustain most of the skater's weight on the front wheel.

In this modification the frame consists of a foot-plate 46, preferably of sheet steel, mounted upon a bracket 47, having an upwardly extending rearwardly curved arm 48, and a tail-piece 49, which is pivotally held to the underface of plate 46, for slight swinging movement in a horizontal plane, by bolt 50, said swinging movement being limited by an U-shaped member 51 fitting over said tail-piece 49 and secured to plate 46 by rivets or other suitable means 4. The bracket 47 is also secured to plate 46 by rivets or other suitable means 4 and carries axle 52 for the large front wheel C, preferably having pneumatic tire D, and the tail-piece 49 is provided with a perforation to receive the axle 53 for small rear wheel E, preferably having pneumatic tire F, a lock-nut 23 being screwed on the end of said axle 53 to hold it in place.

The plate 6 is provided with the usual instep strap 7 and the toe-clamps 8ᵃ, which slide through brackets 54 secured by rivets 4 to plate 46, are held in adjusted relation by clamp-screws 10ᵃ working through screw-threaded bores in the respective brackets 54 and engaging the bottom faces of said clamps 8ᵃ with their upper ends. The lower end portions of said clamping screws 10ᵃ are angular in cross-section to facilitate ease of adjustment.

An extension 55 is pivotally connected to the arm 48 by pivot pin 56 and has a lip 57 fastened to it by rivets 4 and overlapping the rounded upper end of arm 48 and lying snugly against the outer face thereof, the arm 48 and extension 55 together forming the brace, laterally rigid, but allowing pivotal movement in a vertical plane by the extension 55 relative to the arm 48.

The rear wheel E is provided with a brake-drum 30 extending from its inner face concentric with its hub. Surrounding this brake-drum 30 is the split brake-band 31, provided with the usual brake-lining 32 gripping upon the brake-drum 30, and reinforced with a chain 33 having its upper and rear end secured thereto by a rivet 4 and its lower and forward end anchored to the adjacent portion of the tail-piece 49 by a pin 57.

The lower part of extension 55 has an arm 58 continued down below the top of arm 48 on the inside thereof. This arm 58 is curved forwardly and downwardly and provided with a perforation 59 and, nearer its end and in front of perforation 59, with a projection or stop 60. The lip of flange 39 of the brake-band 31 is perforated and a link 61 hooks into the perforation 59 of arm 58 and its other end is screw-threaded and extends through the perforation in flange or lip 39 of band 31 and receives a lock-nut 23, which may be screwed on or slightly backed off, as desired, to adjust the brake action.

The upper portion of extension 55 is stepped in or offset at 62 to provide clearance room for rocking the foot and skate in either direction and to provide for maintaining the wheels at the proper inclination with relation to the line of gravity. To facilitate the rocking of the foot and skate the upper end of the extension 55 is connected by hinge 63 to the plate 20 of cuff 24.

The function of stop 60 is to prevent the arm 58 from swinging too far back when not attached to a skater's foot.

It will be seen that as the foot is moved forward for braking the angle between the toe and leg is increased, such a movement to an unusual degree causing the extension 55 to swing backward and its arm 58 to swing forward, thus pulling forwardly and upwardly on the link 60 and tightening the brake-band 31, and thus causing the brake-lining 32 to grip tightly upon the brake-drum 30.

In skates of this type and having most of the skater's weight sustained by the front wheel, it is desirable, even with hard tires, that the tail-piece 49 be mounted to have a limited swinging motion to aid in steering, and a spring tending to hold the tail-piece

49 normally in such position that the two wheels would be in longitudinal alignment might be used.

If pneumatic tires are used, as illustrated and as contemplated, or if a pneumatic tire D be used upon the large front wheel C, the thrust of the skate sidewise causes the rim of the wheel C to float outward and steer the skate outward, which it would not do if the weight were distributed evenly on both wheels as in the form of embodiment illustrated in Figures 1, 2 and 3. To aid in overcoming this outward creeping action I find the slight relative swinging motion of the tail-piece 49 and the small rear wheel E carried thereby highly useful so as to permit steering of the front wheel C independently of the rear wheel E.

It is not necessary that the rear wheel E be in any particular position since it does not carry much of the weight, but it should be placed so that it will not interfere with the skater's stroke, and I therefore prefer to place it directly behind the front wheel and in the same plane, which in the form illustrated in Figures 16 and 17, is inclined outwardly approximately ten degrees to a vertical plane.

In case the foot-plate 46 were mounted at right angles to the wheels C and E there would be no occasion to twist the tail-piece 49 as shown.

Having thus described my invention what I claim as new and desire to secure by Letters Patent is:

1. A skate consisting of a rigid fixed form frame, fixed axles immovable with relation to said frame and protruding beyond one side thereof near the respective ends thereof, wheels mounted respectively on said axles on the single side of said frame, a brace connected to said frame and adapted to be connected at its upper end to the leg of the skater, and a brake mechanism adapted to operate on one of said wheels, said frame having a foot-plate which is located at a distance from the ground equal to substantially one-third of the distance of the upper end of said brace from the ground.

2. A skate consisting of a rigid fixed form frame, two fixed axles immovable with relation to said frame and protruding therefrom beyond a single side thereof and near the respective ends thereof, wheels respectively mounted on said axles on the single side of said frame, a brace connected to said frame and adapted to be connected at its upper end to the leg of the skater, and a brake mechanism adapted to operate on one of said wheels, said frame having a foot-plate, the location of said brace and the distance of its point of application of pressure laterally to the skater's leg being so related to the disposition of said wheels and the point of application of pressure to the foot-plate that the angle of the line of application of pressure to said plate with relation to the line of gravity will not exceed approximately ten degrees.

3. A skate of the type having wheels so proportioned and mounted as to extend above the foot-plate and on the single side of said plate, the other side of the skate being unsupported, said skate comprising a substantially rigid fixed-form frame, two axles permanently fixed with relation to each other and to said frame and protruding from the latter on the same side thereof respectively adjacent the end portions thereof, and wheels mounted on said axles, said frame having a foot-plate, the upper surface of which is always parallel to a line intersecting the points of contact of said wheels with the ground and is located at a distance from said line equal to substantially the distance between the skater's ankle joint and the bottom of the heel of his shoe.

4. A skate consisting of a substantially rigid fixed-form frame, two fixed axles immovable with relation to said frame and carried by the same and protruding beyond the same side of said frame respectively adjacent the end portions thereof, and two wheels respectively mounted on said axles, said frame having a foot-plate, in combination with a brace secured to said frame, the location of said brace and its form and the distance from the ground of its point of application of pressure laterally to the skater's leg being so related to the disposition of said wheels and the point of application of pressure to the foot-plate that the angle between the line of application of pressure to said foot-plate and the fixed plane of each of said wheels with relation to said frame will at no time during a normal skating stroke exceed thirty degrees.

5. A skate comprising a substantially rigid fixed-form frame having a foot-plate, road engaging elements, and mounting means for the latter, in combination with a brace secured to said frame, said mounting means comprising two axles in permanently fixed relation to each other and to said frame and protruding from the same side of the latter adjacent the ends thereof respectively, said road engaging elements consisting of two wheels respectively mounted on said axles and of such size as to extend above said foot-plate and as thus mounted lying always in the same plane at an inclination to the line of gravity, and the location of said brace and its form and the distance from the ground of its point of application of pressure laterally to the skater's leg being so related to the constant common plane of said wheels and the point of application of pressure to the foot-plate that the said wheels will be perpendicular

to the road surface with their axes parallel during the latter portion of the normal skating stroke when they are subjected to the heaviest load and greatest side-thrust.

6. A skate comprising a substantially rigid fixed-form frame having a foot-plate, road engaging elements, and two axles in permanently fixed relation to each other and to said frame and protruding from the same side of the latter respectively adjacent the respective ends thereof and, as so arranged, having parallel axes, in combination with a brace connected to said frame, said road engaging elements consisting of two wheels respectively mounted upon said axles at a common outward inclination to the line of gravity, and pneumatic tires respectively mounted upon said wheels, and the location of said brace and its form and the distance from the ground of its point of application of pressure laterally to the skater's leg being so related to the disposition of said wheels and the point of application of pressure to the foot-plate that said pneumatic tires, while having their axes parallel, will each be disposed in a vertical plane with only their tread portions in engagement with the road surface during the latter portion of the normal skating stroke, whereby the rolling friction of the tires with the ground will not be increased by excessive lateral distortion under side-thrust which is greatest during said portion of the normal skating stroke.

7. A skate comprising a substantially rigid fixed-form frame having a foot-plate, road engaging elements, and two axles in permanently fixed relation to each other and to said frame and protruding from the same side of the latter respectively adjacent the respective ends thereof and as so arranged having parallel axes, in combination with a brace rockably mounted in said frame for movement in a vertical plane extending longitudinally of said frame and adapted to have its upper portion secured to the skater's leg, a brake mechanism, and a projection carried by said brace and adapted to act on the brake mechanism to apply it or permit its release, said road engaging elements consisting of a front wheel and a rear wheel respectively mounted on said axles, said brake mechanism comprising a brake-band adapted to act on the rear wheel and having a part adapted to be engaged by said projection to tighten said brake band on said wheel, a stop for preventing movement of said part to inoperative relation to said projection, and means for releasing said brake-band from said wheel, and said brace carrying said projection in rigid fixed position with relation to said brace at such angle and location that said projection will not engage said part of the brake band during the usual rocking movement of the brace incident to the change of angle between the skater's leg and toe during the normal skating stroke with this type of skate and will only engage said part to apply the brake when the brace is rocked rearward to an unusual degree due to a forward movement of the leg to point the toe to an unusual degree.

8. In combination with a skate frame and a skate wheel, a brake element adapted to operate on said wheel and so mounted with with relation to the forward rotation of the wheel as to be actuated thereby automatically upon being brought into operation by the brake operating means, and brake operating means carried by said frame and comprising an element extending toward, and adapted to act upon, said brake element to actuate it.

9. In combination with a skate frame and a skate wheel, a brake element adapted to operate on said wheel and so mounted with relation to the forward rotation of the wheel as to be actuated thereby automatically upon being brought into operation by the brake operating means, and brake operating means, said brake operating means comprising a part having rocking movement about an axis having a fixed relation to said frame and carrying a portion adapted to be moved by a movement of the skater's leg resulting in pointing the toe to an unusual degree to actuate said brake element.

In testimony whereof, I have signed my name to this specification at New York, New York this 31st day of January 1923.

CHARLES HASKELL CLARK.