May 12, 1925. 1,537,178

J. E. MAYNARD

HELMET

Filed Oct. 11, 1923

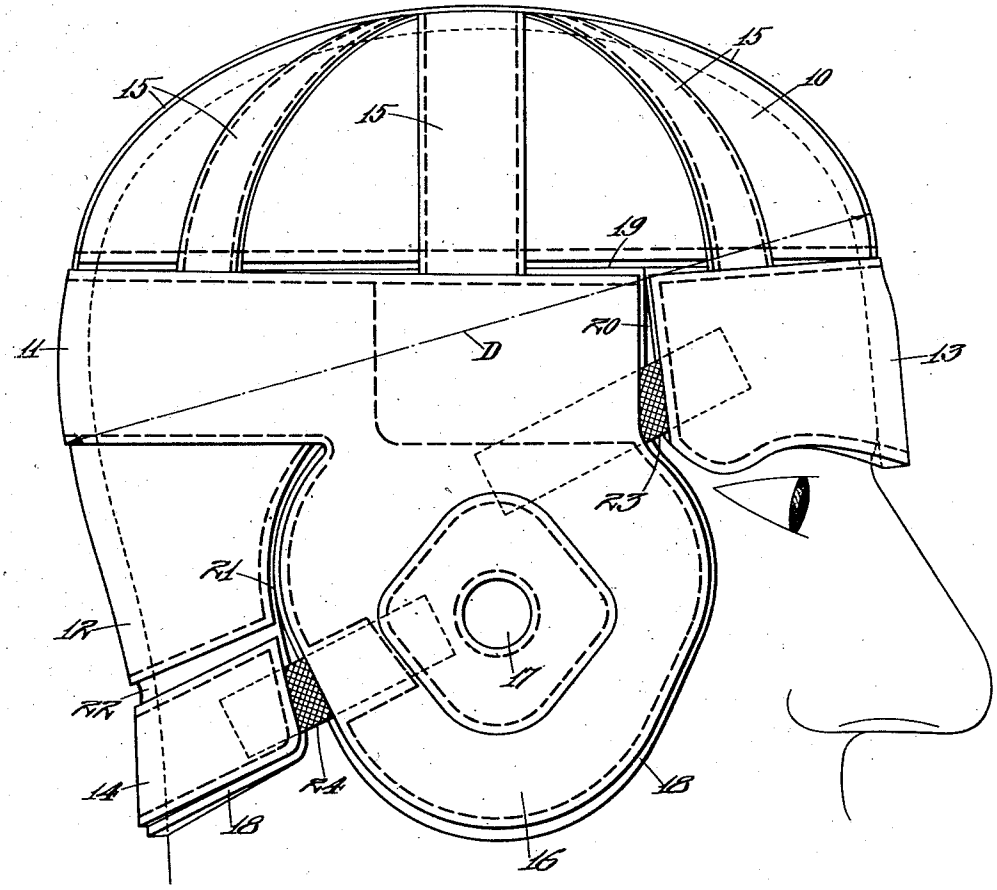

Fig. 1.

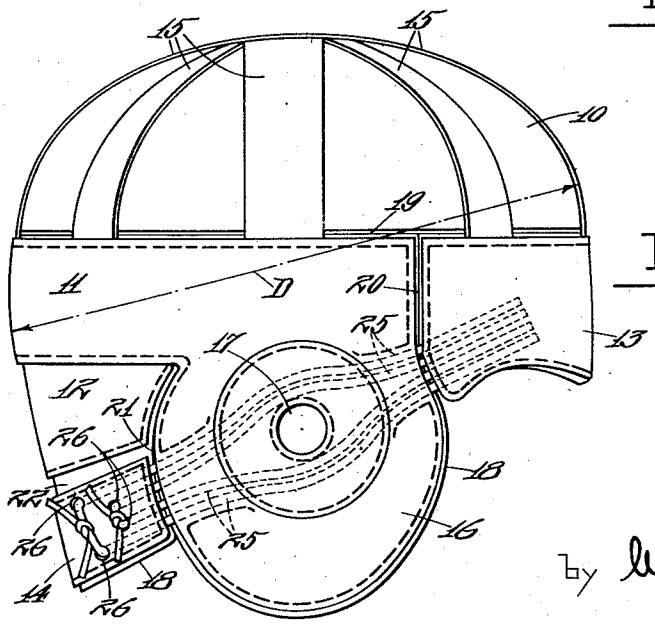

Fig. 2.

INVENTOR:
John E. Maynard,
by Macleod, Calver, Copeland & Dike,
Attys.

Patented May 12, 1925. 1,537,178

UNITED STATES PATENT OFFICE.

JOHN E. MAYNARD, OF PLYMOUTH, NEW HAMPSHIRE, ASSIGNOR TO THE DRAPER-MAYNARD COMPANY, OF PLYMOUTH, NEW HAMPSHIRE, A CORPORATION OF NEW HAMPSHIRE.

HELMET.

Application filed October 11, 1923. Serial No. 667,985.

To all whom it may concern:

Be it known that I, JOHN E. MAYNARD, a citizen of the United States, residing at Plymouth, county of Grafton, State of New Hampshire, have invented a certain new and useful Improvement in Helmets, of which the following is a specification, reference being had therein to the acompanying drawings.

This invention relates to football helmets and similar head protecting coverings and has for its object to provide a device of this character which may be easily and quickly put on or taken off, which is automatically retained securely in place upon the head of the wearer without lacing, and which is so constructed as to tend to seat itself firmly upon the cranium instead of tending to work upwardly, as is the case with such helmets as at present usually constructed.

The foregoing and other objects of the invention, together with means whereby the same may be carried into effect, will best be understood from the following description of certain forms or embodiments thereof illustrated in the accompanying drawings, in which:

Fig. 1 is a side elevation of a helmet constructed in accordance with the invention, showing the same in position upon the head of the wearer.

Fig. 2 is a similar view illustrating a modified construction and showing the same removed.

Referring to Fig. 1, the helmet herein shown comprises a skull portion including an upper section 10, an intermediate section 11, and a rear section 12, a forehead flap 13 at the front of the helmet below the top section 10, and a neck flap 14 at the rear of the helmet below the rear section 12. The forehead flap 13 and the intermediate section 11 are supported from the top section 10 by means of reinforcing straps 15, which extend over said top section, and are preferably stitched at their edges thereto, and which are secured at their ends to the upper edges of said intermediate section and forehead flap. The intermediate section 11 is formed, between the forehead flap 13, on the one hand, and the section 12 and neck flap 14, on the other, with depending ear flaps 16 provided with ear openings 17. The parts above referred to are composed of stiffly flexible material, preferably heavy leather, while the helmet is lined with felt or other suitable padding material 18. While the lining may be otherwise arranged, it is preferably divided along a line 19 separating the top section 10 from the intermediate section 11 and forehead flap 13, along a line 20 between said forehead flap and the intermediate section 11, and along a line 21 between the ear flaps 16, on one hand, and the rear section 12 and neck flap 14, on the other, being otherwise continuous. The material of the lining forms a hinge 22 upon which the neck flap 14 is freely movable, the forward flap 13 being similarly movable on the ends of the straps 15 by which it is supported.

In accordance with the present invention, the movable flaps 13 and 14, which, generally speaking, are located below the skull portion of the helmet, are resiliently drawn toward one another along lines which are located below the maximum diameter of said skull portion, (indicated by the line D), thereby tending automatically to contract the helmet from front to rear below this maximum diameter, so as to cause the top thereof to be drawn down firmly upon the head of the wearer.

To this end, in the construction shown in Fig. 1, the forehead and neck flaps 13 and 14 are connected at each end with the corresponding ear flap 16 by means of strips of elastic webbing 23 and 24, respectively, said strips being suitably secured to the respective parts, as by stitching.

In the construction shown in Fig. 2, there is provided a plurality of elastic cords 25 secured at one end to the forehead flap 13 and extending at both sides of the ear opening 17 through the ear flap 16 between the body and lining of the latter. The opposite ends of the cords 25 are passed through perforations 26 in the neck flap 14 and are tied together at the exterior thereof, whereby the tension of said cords may be readily adjusted.

It will be seen that in both forms of the invention shown, the lines of force tending to draw the flaps 13 and 14 toward one another cross the ear flaps 16, which are en-

gaged by or connected with the resilient devices, thereby holding said ear flaps in close engagement with the head of the wearer and contracting the helmet laterally as well as from front to rear.

Having thus described my invention, I claim:

1. A helmet comprising a skull portion, ear flaps, movable forehead and neck flaps depending from said skull portion at the front and rear respectively, said neck flap being independent of said ear flaps, and means, including a resilient connection between said neck and ear flaps, for resiliently drawing said forehead and neck flaps toward one another along lines located below the maximum diameter of the helmet.

2. A helmet comprising a skull portion having depending ear flaps, movable forehead and neck flaps at the front and rear respectively of said ear flaps and independent thereof, and means, including a resilient connection between said neck and ear flaps for drawing said forehead and neck flaps toward one another along lines extending across said ear flaps, said members engaging said ear flaps to draw the latter against the head of the wearer.

3. A helmet comprising a skull portion having depending ear flaps provided with ear openings, movable forehead and neck flaps at the front and rear respectively of said ear flaps, said neck flap being separate from said ear flaps, and a plurality of elastic cords connecting said forehead and neck flaps and extending across the lines of separation between said neck and ear flaps and also across said ear flaps at both sides of said ear openings.

4. A helmet comprising a skull portion, movable forehead and neck flaps depending from said skull portion at the front and rear respectively, one of said flaps being perforated, and a plurality of elastic cords secured at one end to the other of said flaps, the opposite ends of said cords extending through the perforations in said first named flap and being tied together at the exterior thereof.

In testimony whereof I affix my signature.

JOHN E. MAYNARD.