June 17, 1924. 1,498,446

M. C. GESKEY

SEWER CLEANER

Filed Feb. 2, 1924

Fig. 1.

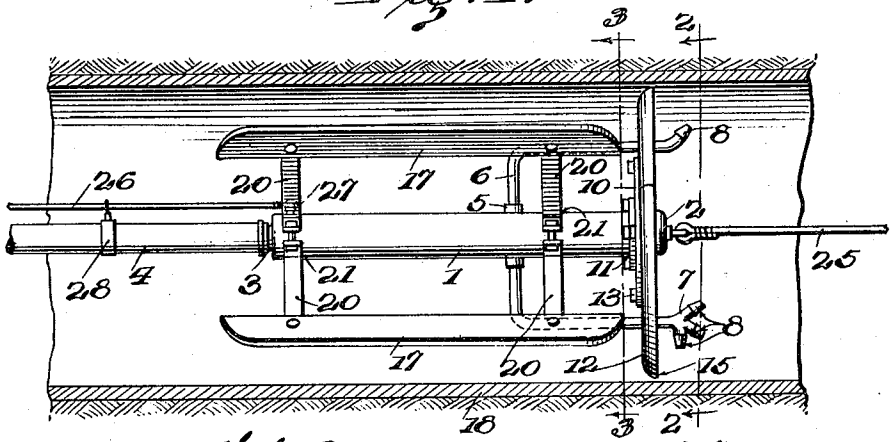

Fig. 2.

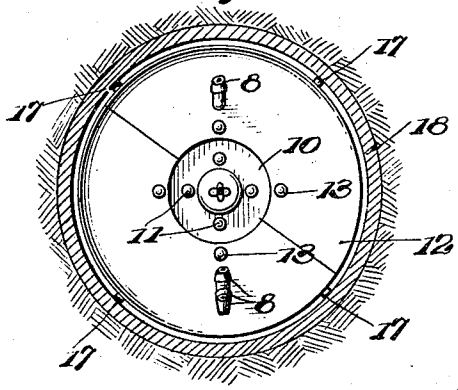

Fig. 3.

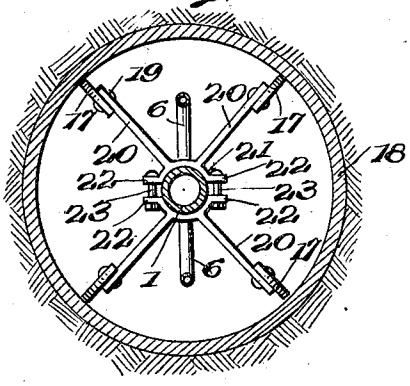

Fig. 4.

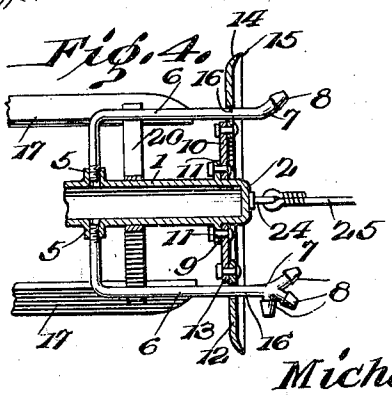

WITNESSES

James A. Long

INVENTOR

Michael C. Geskey

BY Munn & Co.

ATTORNEYS

Patented June 17, 1924. 1,498,446

UNITED STATES PATENT OFFICE.

MICHAEL C. GESKEY, OF LINCOLN, ILLINOIS.

SEWER CLEANER.

Application filed February 2, 1924. Serial No. 690,316.

To all whom it may concern:

Be it known that I, MICHAEL C. GESKEY, a citizen of the United States, and resident of Lincoln, in the county of Logan and State of Illinois, have invented certain new and useful Improvements in Sewer Cleaners, of which the following is a specification.

My invention relates to improvements in devices which are adapted to be drawn through sewers or like conduits and to effect the cleaning of such conduits and it consists in the combinations, constructions and arrangements herein described and claimed.

An object of the invention is to provide an efficient device of the character described which is of simplified construction and which affords facilities for dislodging material from the inner wall of a sewer or like conduit through which the device is drawn as well as for effectually breaking up and ejecting material from the sewer or like conduit.

A further object of the invention is to provide a device of the character described which comprises detachable cleaning and guide members which may be replaced by like members of suitable size to adapt the device for use in cleaning a conduit of any given size.

Other objects and advantages will be apparent from the following description, considered in conjunction with the accompanying drawings, in which—

Figure 1 is a longitudinal vertical section through a portion of a sewer conduit, showing a cleaner embodying the invention disposed therein,

Figure 2 is a section along the line 2—2 of Figure 1,

Figure 3 is a section along the line 3—3 of Figure 1, and

Figure 4 is a fragmentary longitudinal vertical section through the cleaner.

In carrying out my invention, I provide a tubular body 1 which is closed at its forward end as indicated at 2 and is adapted at its rearward end for connection with a coupling 3 whereby the tubular body may be attached to a hose 4 or like conduit for a purpose which will presently appear.

The tubular body 1 is provided adjacent to its forward end with a plurality of lateral nipples or pipe connections 5. In the embodiment of the invention illustrated in the drawings, two of the nipples 5 are provided, one being directly above the other.

Discharge pipes 6 are connected with the nipples 5 and preferably have the form clearly shown in the drawings, each discharge pipe 6 extending radially outward from the tubular body 1 for part of its length, then being bent to extend forwardly in spaced relation to the tubular body 1 to a plane located slightly in advance of the forward end of the tubular body 1 and finally being bent obliquely outward as at 7 and provided at its free or forward end with one or more discharge nozzles 8, the upper discharge pipe preferably being provided with one discharge nozzle 8 and the lower discharge pipe being provided with three of the nozzles 8.

The tubular body 1 has a flange 9 located in advance of the nipples 5 near the forward end of the tubular body. An attaching or carrying disk 10 is mounted on the tubular body 1 in advance of the flange 9 and secured adjacent to its inner end to the flange 9 by bolts 11. An annular cutter or scraper plate 12 which obviously may be formed of two or more pieces is removably secured adjacent to its inner edge to the attaching plate 10, as by means of nuts and bolts such as indicated at 13, the inner edge portion of the cutter plate being clamped against the forward face of the attaching plate 10 and adjacent to the outer edge of the latter, the cutter plate 12 being held in concentric relation to the tubular body 1. The cutter plate 12 curves forwardly at its outer edge at 14 and the forwardly curved outer edge portion thereof tapers in thickness so that the cutter plate has a relatively sharp forwardly projecting outer edge, as indicated at 15 and as best seen in Figure 4. The cutter plate 12 has openings 16 through which the pipes 6 extend, whereby the nozzles 8 will be positioned slightly in advance of the cutter plate 12 and will discharge outward in a plane oblique to and slightly in advance of the plane of the cutting edge 15.

Runners or guides 17 adapted for sliding contact with the inner wall of a sewer conduit or like tubular member are removably secured by fastening devices 19 to the outer end portions of radially extending bracket arms 20 which are carried by clamps 21. The latter are mounted on the tubular body

1 and each clamp 21 preferably comprises two cooperative sections adapted to embrace the tubular member 1 and being provided with pairs of ears 22 apertured to receive bolts 23 for connecting the clamp sections together and for holding the clamp sections in embracing relation to the tubular body 1. In the embodiment of the invention illustrated in the drawings, each of the clamp sections has two radially extending arms 20 and two of the clamps 21 are mounted on the tubular body 1, the respective clamps being spaced a considerable distance apart along the tubular body 1 and each of the runners 17 being attached adjacent to one of its ends to an arm 20 of one of the brackets and being attached adjacent to its opposite end to the corresponding arm 20 of the other clamp. With this arrangement, the runners 17 are spaced equi-distant from the longitudinal axis of the tubular body 1 and also are located substantially equal distances from one another. The tubular body 1 has the forward end thereof provided with an eyelet or hook 24 which is located centrally of the end 2 of the tubular member and to which a draft element 25 is attached. The latter preferably is a flexible cable.

A suspension cable 26 is attached at 27 to the tubular body 1 adjacent to the rearward end of the latter and is provided with straps 28 which encircle the hose 4 and tend to support the latter.

From the foregoing description of the various parts of the device, the operation thereof may be readily understood. The hose 4 is adapted to supply water or other cleaning fluid under pressure to the tubular body 1. The cable 25 may be attached to a windlass or like device for pulling the cable 25 and therefore the device through the sewer conduit 18 or through any portion of such conduit, as for instance from one manhole with which the sewer conduit is in communication to the next manhole. As hereinbefore stated, the cutter plate 12 and the slide members 17 are removable as are the clamps 21 so that clamps having arms 20 of suitable lengths to position the slide members 17 in sliding contact with the inner wall of a conduit of any given size and a cutter plate of a suitable width in respect to the conduit 18 of any given diameter may be attached to the tubular body 1 at any given time. The device therefore may be used to effect the removal of material from sewer conduits of various diameters.

When the device is drawn through a sewer conduit 18 in the manner described, the cutting edge of the plate 12 will be positioned close to the inner wall of the conduit and will scrape or dislodge all material from the inner wall of the conduit and deflect the dislodged material inward. The water passing under pressure from the hose 4 in the tubular body 1 will be discharged through the nozzles 8 slightly in advance of the point of contact and will strike the material adhering to the inner wall of the conduit just before such material would be engaged by the forwardly moving cutter blade. Such material therefore is loosened or broken up before being struck by the forwardly moving cutter blades and therefore no very great resistance to the progress of the device is interposed by the material within the conduit. Such material either is washed through the conduit ahead of the device or is pushed through the conduit by the device to any suitable place where it may be collected and removed from the conduit or otherwise disposed of.

Obviously, my invention is susceptible of embodiment in forms other than that illustrated in the accompanying drawing, and I therefore consider as my own all modifications and adaptations of the form of the device herein described as fairly fall within the scope of the appended claims.

Having thus described the invention, what is claimed is:

1. A device for cleaning tubular conduits comprising a tubular body adapted to be drawn through a conduit, said tubular body being closed at one end and being adapted at its other end for connection with a pressure fluid supply member, discharge nozzles carried by said tubular body for discharging pressure fluid supplied to said tubular body against the inner wall of said conduit, and a scraper member carried by said tubular body for dislodging material from the inner wall of said conduit.

2. A device for cleaning sewer conduits comprising a tubular body adapted to be drawn through a sewer conduit, said tubular body being adapted at one end for connection with a cleaning fluid supply tube, discharge members carried by said tubular body for discharging cleaning fluid from the interior of the tubular body outward, and an annular cutter plate carried by said tubular body.

3. A device for cleaning sewer conduits comprising a tubular body adapted to be drawn through a sewer conduit, said tubular body being adapted at one end for connection with a cleaning fluid supply tube, discharge members carried by said tubular body for discharging cleaning fluid from the interior of the tubular body obliquely outward, an annular cutter plate carried by said tubular body, and guide means carried by said tubular body for slidably engaging with the inner wall of said conduit to hold said body in concentric relation to the conduit.

4. A device for cleaning sewer conduits comprising a tubular body adapted to be drawn through a sewer conduit, said tubu-

lar body being closed at its forward end and adapted at its opposite end for connection with a source of pressure fluid supply, a plurality of detachable slide members carried by said tubular body at equal distances radially from the axis of said tubular body for slidably engaging with the inner wall of said conduit to hold the tubular body in concentric relation with the conduit, discharge tubes communicating with the interior of said tubular body adjacent to the forward end of the latter and extending in advance of said body, and an annular cutter plate carried by said body rearwardly of the discharge ends of said discharge tubes.

5. A device for cleaning sewer conduits comprising a tubular body adapted to be drawn through a sewer conduit, said tubular body being closed at its forward end and adapted at its opposite end for connection with a source of pressure fluid supply, a plurality of detachable slide members carried by said tubular body at equal distances radially from the axis of said tubular body for slidably engaging with the inner wall of said conduit to hold the tubular body in concentric relation with the conduit, discharge tubes communicating with the interior of said tubular body adjacent to the forward end of the latter and extending in advance of said body, an annular cutter plate carried by said body rearwardly of the discharge ends of said discharge tubes, said discharge tubes being adapted to discharge cleaning fluid passing therethrough obliquely outward.

6. A device for cleaning sewer conduits comprising a tubular body adapted to be drawn through a sewer conduit, said tubular body being closed at its forward end and adapted at its opposite end for connection with a source of pressure fluid supply, a plurality of detachable slide members carried by said tubular body at equal distances radially from the axis of said tubular body for slidably engaging with the inner wall of said conduit to hold the tubular body in concentric relation with the conduit, discharge tubes communicating with the interior of said tubular body adjacent to the forward end of the latter and extending in advance of said body, an annular cutter plate carried by said body rearwardly of the discharge ends of said discharge tubes, said discharge tubes being adapted to discharge cleaning fluid passing therethrough obliquely outward, said cutter plate being detachable from said tubular body.

7. A device for cleaning sewer conduits comprising a tubular body closed at one end and adapted at its other end for connection with a liquid supply hose, means at the closed end of said tubular body to which a draft element may be attached, runners removably supported on said tubular body for slidably engaging with the inner wall of a conduit to hold the tubular body in spaced concentric relation to the conduit, discharge conduits communicating with the interior of said body and extending forwardly beyond the forward end of said tubular body, said discharge conduits having the discharge ends thereof turned radially outward, and an annular cutter plate removably supported on said tubular body.

8. A device for cleaning sewer conduits comprising a tubular body closed at one end and adapted at its other end for connection with a liquid supply hose, means at the closed end of said tubular body to which a draft element may be attached, runners removably supported on said tubular body for slidably engaging with the inner wall of a conduit to hold the tubular body in spaced concentric relation to the conduit, discharge conduits communicating with the interior of said body and extending forwardly beyond the forward end of said tubular body, said discharge conduits having the discharge ends thereof turned obliquely outward, an annular cutter plate removably supported on said tubular body, said cutter plate having the outer edge thereof turned forwardly.

MICHAEL C. GESKEY.