F. I. PARKER.

LIFTING MAGNET.

APPLICATION FILED FEB. 24, 1910. RENEWED OCT. 8, 1919.

1,334,504.

Patented Mar. 23, 1920.

2 SHEETS—SHEET 1.

Fig. 1.

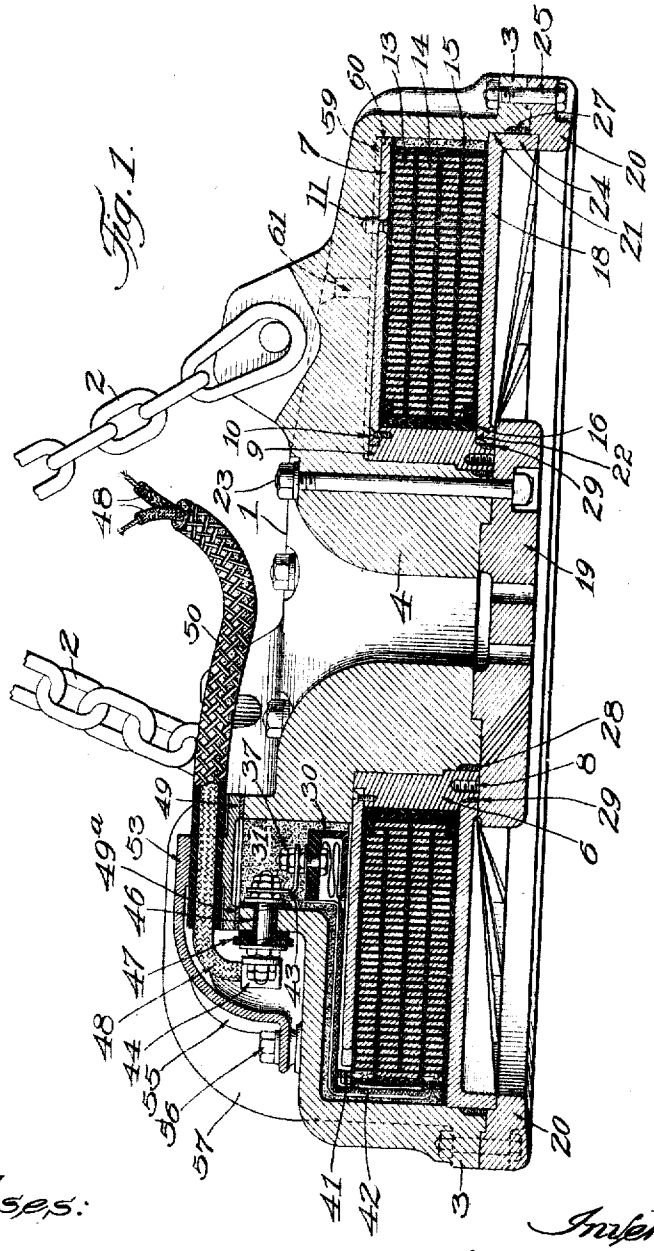

Witnesses:
George Hayner
E. W. Nussow

Inventor:
Frank I. Parker.
By Edwin R. H. Towers, Jr.
Atty.

F. I. PARKER.

LIFTING MAGNET.

APPLICATION FILED FEB. 24, 1910. RENEWED OCT. 8, 1919.

1,334,504.

Patented Mar. 23, 1920.

2 SHEETS—SHEET 2.

Fig. 2.

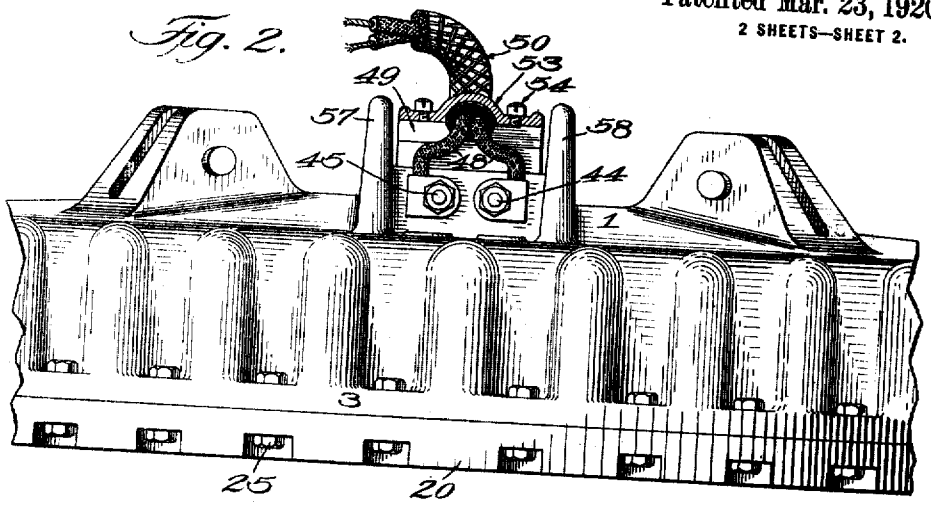

Fig. 3.

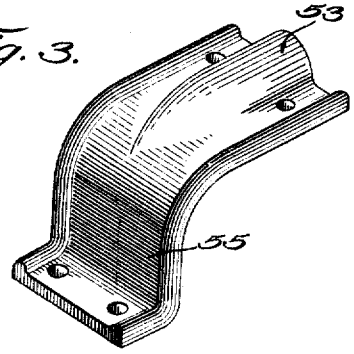

Fig. 4.

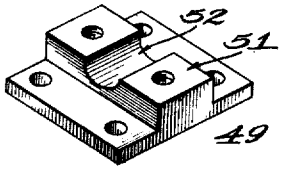

Fig. 5.

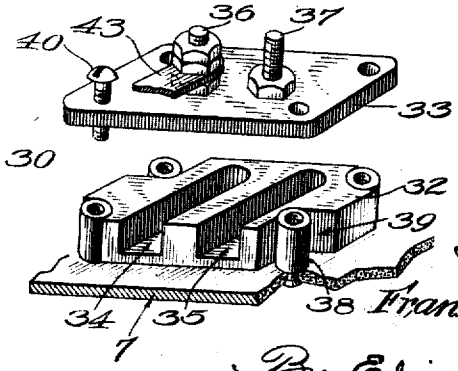

Witnesses:

Geo. Haynes.

E. N. Wilson

Inventor:

Frank I. Parker.

By Edwin B. H. Towers, Jr.

Atty.

UNITED STATES PATENT OFFICE.

FRANK I. PARKER, OF MILWAUKEE, WISCONSIN, ASSIGNOR, BY MESNE ASSIGNMENTS, TO THE CUTLER-HAMMER MFG. CO., OF MILWAUKEE, WISCONSIN, A CORPORATION OF WISCONSIN.

LIFTING-MAGNET.

1,334,504. Specification of Letters Patent. Patented Mar. 23, 1920.

Application filed February 24, 1910, Serial No. 545,646. Renewed October 8, 1919. Serial No. 329,414.

To all whom it may concern:

Be it known that I, FRANK I. PARKER, a citizen of the United States, residing at Milwaukee, in the county of Milwaukee and State of Wisconsin, have invented new and useful Improvements in Lifting-Magnets, of which the following is a full, clear, concise, and exact description, reference being had to the accompanying drawing, forming a part of this specification.

This invention relates to lifting magnets.

One of the objects of the invention is to improve the space efficiency of a lifting magnet.

Another object is to provide a powerful magnet of relatively light weight.

Another object is to provide a lifting magnet wherein the energizing winding may be readily removed for inspection and repair.

A further object is to provide a lifting magnet wherein the supply leads are adequately protected.

A further object is to provide a lifting magnet in which the energizing winding may be connected to and disconnected from the magnet terminals after the winding has been placed in the magnet frame.

A still further object is to provide an improved lifting magnet in which the energizing winding may be sealed with a suitable protecting material after it has been secured in the magnet frame.

Other objects and advantages will appear from the following specification.

An embodiment of the invention is illustrated in the accompanying drawings, the views of which are as follows:

Figure 1 is a vertical sectional view through the magnet;

Fig. 2 is a side elevation of a portion of the magnet with the terminal protecting plate shown in section;

Figs. 3 and 4 are detail perspective views of portions of the outside terminal housing; and

Fig. 5 is a perspective view of the inside terminals with the parts thereof separated.

The magnet includes a frame 1, preferably made of steel, and arranged to be supported by suitable chains 2. The frame is provided with an annular outer pole piece 3 and an annular inner pole piece 4. The pole pieces may take various other forms if desired. The inner and outer pole pieces are spaced apart and concentrically arranged to provide an annular recess within which is located an energizing winding.

The energizing windings ordinarily used with lifting magnets are large and heavy and consequently are difficult to apply or remove. If they are embedded in insulating material this difficulty is increased. The difficulty ordinarily encountered in applying and removing the winding is lessened by mounting the winding upon a removable sleeve which closely surrounds the inner pole piece. This sleeve, which is preferably of magnetic material, supports the winding when it is in the recess and also when it is being and has been withdrawn therefrom.

This removable sleeve comprises a tubular member 6 surrounding the inner pole piece 4 and having secured to one end thereof an annular plate 7. The tubular member is preferably of considerable thickness and is arranged so that it forms a part of the magnetic circuit of the magnet frame. The plate 7 is relatively thin, though sufficiently thick to act as a support for the winding as it is being withdrawn. This plate is made of either magnetic or non-magnetic material. It is preferably made of magnetic material and thereby forms a part of the magnetic circuit.

The removable sleeve is provided with screw-threaded apertures 8 adapted to receive eye-bolts which are screwed thereinto when it is desired to remove the winding. The hooks of a crane are then inserted in the eyes of these bolts and the whole winding may be pulled out of the magnet, while being supported by the plate 7. This plate is arranged to be removed after the winding has been taken from the frame and thus permit ready inspection of the winding. For this purpose the plate 7 fits over an annular shoulder 9 on the end of the tubular member 6 and is detachably secured thereto by screws 10 or by any other suitable means. Plate 7 is preferably provided with a projecting stud 11 arranged to fit into a recess in the magnet frame to prevent the plate and the winding from turning. The tubular member 6 and the plate thus, in effect, form a removable spool on which the energizing winding 13 may be wound. When this spool

is placed in the magnet frame it forms a part of the magnetic circuit, thus increasing the space efficiency. The tubular member 6 performs two functions. It constitutes a support for the energizing winding and it forms a part of the magnetic circuit and of the inner pole piece of the magnet.

The winding 13 may be of any desired construction, but preferably a winding is employed of the general construction disclosed in Patent No. 1,325,914, patented December 23, 1919. Briefly described, such a winding is formed of a plurality of sections 14, each section comprising a flat strip of conducting material wound flat-wise into a spiral with a strip of insulating material interposed between the convolutions thereof. The sections are then built up one upon another with suitable layers of insulating material 15, interposed between the same, and then the terminals of adjacent coils are connected to form one continuous winding.

With the structure illustrated, the winding may be initially formed upon the tubular member 6. When the winding is so formed, one or more layers of suitable insulating material 16 should first be placed around said tubular member, after which the conducting strips may be coiled thereon. In practice, to secure thorough insulation of the winding, it is desirable to flange the ends of the insulation placed on the tubular member so that the same will be overlapped by the layers of insulation placed over the outside of the winding. In order to prevent bulging of the outside layers of insulation by the flanged ends of the insulation 16, I preferably reduce the width of the inner turns of the top and bottom sections of the winding to accommodate said flanged ends. This enables the plate 7 to be placed closely against the upper side of the winding, thereby avoiding any waste space. One of the advantages of making the plate 7 detachable is to give access to the upper side of the winding for inspection, repairs, etc., without necessitating the removal of said winding from the tubular member 6. The winding, the tubular member 6 and the plate 7, in effect, form a unitary structure which, when the magnet frame is inverted, may be readily inserted into and withdrawn from the same. Of course, in practice, the winding support may be of other constructions and still form a part of the magnet frame.

The winding and its support may be secured in the magnet frame in any preferred manner. In practice, however, I prefer to place on the underside of the winding an annular non-magnetic protecting or cover plate 18 and to provide removable pole shoes 19 and 20 for retaining the winding support and protecting plate 18 in place. These pole shoes are made of magnetic material and thus form a part of the magnetic circuit. They project some distance below the winding so as to take the blows from the attracted material. Such material will invariably strike the pole shoes first, and thus the cover plate and winding are protected. The pole shoes being removable may be easily replaced when they become worn. This structure provides ample protection for the winding without decreasing the lifting power of the magnet. It is more specifically described and claimed in Patent No. 1,325,914, hereinbefore referred to. The outer pole piece 3 of the magnet frame and tubular member 6 are preferably provided with annular recesses 21 and 22, respectively which furnish shoulders for supporting the protecting plate 18 to prevent the same from unduly pressing against the winding and to prevent slipping thereof. The inner pole shoe 19 is arranged to overlap both the tubular member 6 and the protecting plate 18 and is preferably retained in place by means of bolts 23, passing through the inner pole. At its outer periphery the protecting plate is preferably provided with an annular flange 24, the end of which is adapted to rest upon the outer pole shoe 20. The outer pole shoe 20 may be secured to the magnet frame in any desired manner as by means of through bolts 25. With this arrangement the pole shoes 19 and 20 may be readily removed, thereby permitting the withdrawal of the cover plate 18 and winding support from the magnet frame. In practice, it is desirable to render the winding moisture proof and to this end I preferably insert suitable annular packings 27, 28 and 29 in the joints between the protecting plate 18, the magnet frame and the tubular member 6. Any desired material may be employed for these packings.

Upon the plate 7 I secure a terminal block 30 arranged to project into an opening 31 in the magnet frame. This terminal block may be of any desired construction, but, in practice, I prefer to construct the same in the manner illustrated in Fig. 5. As illustrated, the block 30 comprises a base 32 and a top plate 33. The base 32 is provided with recesses 34 and 35 arranged to receive the ends of the leads 41 and 42 from the energizing winding, the leads being preferably reflexed therein as illustrated in Fig. 1. The top plate 33 carries suitable binding posts 36 and 37 arranged to project into the recesses 34 and 35 and to be connected to the leads 41 and 42. For retaining the terminal block in place, I rivet to the plate 7 four studs 38 arranged to fit into notches 39 provided at the corners of the base 32. These studs holds the base 32 against any lateral or longitudinal movement. The studs 38 are tapped to receive fastening screws 40 passing through the top

plate 33. With this arrangement, when the top plate is secured to the studs 38, it firmly holds the base 32 in position.

The binding posts 36 and 37 are arranged to be connected by suitable conducting strips 43 to binding posts 44 and 45 respectively secured to the magnet frame. The binding posts 44 and 45 may be of any preferred construction. These binding posts are preferably insulated from the magnet frame by means of suitable insulating sleeves 46 and insulating disks 47 and are connected to the supply leads 48.

For giving access to the inner ends of the binding posts 44 and 45 and to the terminal block 30, I provide the magnet frame with a removable plate 49 which may be held in place by screws or any other suitable means. A packing 49[a] is preferably inserted between the plate 49 and the magnet frame to form an air tight joint. Upon removal of this plate, the binding posts of the terminal block 30 and the binding posts carried by the magnet frame may be connected and disconnected at will while the energizing winding is in place in the magnet frame. Also upon removal of plate 49 the top of the terminal block 30 may be withdrawn to give access to the ends of the leads 41 and 42 from the winding 13. It will thus be seen that by reflexing the ends of the leads 41 and 42 in the terminal block, the plate carrying the binding posts 36 and 37 may be withdrawn through the opening in the magnet frame to enable inspection or renewal of the connections between said leads and said binding posts.

Magnets of this type are often very roughly handled with the result that the connections between the supply leads and the exterior binding posts become loosened, or the supply leads become injured. To more fully protect the supply leads, I preferably incase the same in a metallically reinforced tube or sleeve 50, and, to prevent undue strain on the connections between said leads and the binding posts, I preferably clamp the protecting tube 50 against the magnet frame. To this end, I provide on the removable plate 49 a raised portion 51 having a curved recess 52 therein for receiving the protecting tube 50 of the supply terminals, and then place over said tube a clamping member 53 having screws 54 passing therethrough and fitting into the plate 49, as best illustrated in Figs. 2, 3 and 4.

It will thus be seen that this clamping arrangement effectually prevents any strain being exerted upon the connections between the leads 48 and their binding posts. To facilitate the connections of the leads to their binding posts, it is desirable to have the ends thereof extend beyond the end of the protecting casing 50, and I, therefore, prefer to provide means for protecting the exposed ends of these leads. To this end I preferably provide the clamping member 53 with a downwardly curved extension 55 adapted to form a protecting plate for said leads. The extension 55 is provided at its end with an angularly disposed portion adapted to be clamped to the magnet frame by means of bolts 56. To still further protect the outside terminal structure, I preferably provide the magnet frame on opposite sides thereof with upwardly extending flanges 57 and 58 which, in practice, I prefer to have project slightly above the clamping member 53. The flanges 57 and 58 cooperate with the extension on the clamping plate 53 to completely inclose the binding posts 44 and 45 and the ends of the leads 48, thus insuring thorough protection thereof. The clamping plate 53, however, may be removed at any time to give access to the binding posts 47 and 48.

In my Patent No. 1,270,969, granted July 2, 1918, I have disclosed a simplified method or process of sealing the energizing winding with a suitable protecting material, using the magnet frame as the sealing receptacle. To carry out this method or process, it is necessary that the magnet frame be rendered substantially air tight, that suitable openings be provided in the same to permit the withdrawal of air and the insertion of protecting material, and that suitable passages or spaces be provided between the magnet frame and the winding for insuring withdrawal of air from all parts of the frame and a thorough distribution of the sealing material over the winding. The packings heretofore described render the magnet frame illustrated sufficiently air tight for carrying out my process of sealing. I have found, in practice, that with the structure illustrated a thorough distribution of the sealing material may be obtained by providing in the magnet frame two or more channels or grooves 59 and coincident notches 60 in the outer periphery of the plate 7 as illustrated in dotted lines Fig. 1. As many of these grooves may be provided as desired, but, in practice, I have found that two are sufficient. In case only two grooves are used, I prefer to space these grooves approximately 120 degrees from the recessed portion of the magnet frame which accommodates the leads 41 and 42 of the winding and which, in effect, forms a third channel or groove for facilitating the distribution of the sealing material. In practice, I provide the magnet frame with two openings 61 shown in dotted lines, each of which communicates with one of the grooves 59. The openings 61 while not so shown are in practice preferably screw threaded to receive suitable screw threaded plugs or the like. In brief, the process of sealing is as follows: An air pump is connected to one

of the openings 61, while the other opening is connected to a receptacle containing the sealing material in a liquid form, a suitable valve being interposed between the magnet frame and said receptacle. The supply of sealing material is first shut off and then the pump operated to create a vacuum within the magnet frame. After this the valve controlling the supply of sealing material is opened, whereupon the sealing material is drawn into the magnet frame and thoroughly distributed over the winding and into any crevices therein. The inflow of sealing material is continued until the magnet frame is full, or substantially full, whereupon the pump is caused to operate to compress the sealing material in the frame. Further details of the process of sealing are disclosed in my Patent No. 1,270,969, granted July 2, 1918, above mentioned.

It is to be understood that the structure shown is for purposes of illustration only and that variations may be made therein without departing from the spirit and scope of the invention as defined by the appended claims.

Having thus described my invention, what I claim as new and desire to secure by Letters Patent, is:—

1. A lifting magnet having a frame provided with an inner pole surrounded by an outer pole, a removable member of magnetic material surrounding the inner pole and forming part of the magnetic circuit, and an energizing winding carried by said removable member.

2. A lifting magnet having a frame provided with an inner pole surrounded by an outer pole with an annular recess between said poles, a removable tubular member of magnetic material surrounding the inner pole and in magnetic contact therewith, and an energizing winding carried by said member and arranged in said recess.

3. A lifting magnet having a frame provided with an inner pole piece surrounded by an outer pole piece, a removable tubular member of magnetic material surrounding the inner pole piece and in magnetic contact therewith, an energizing winding carried by said member, and a removable pole shoe of magnetic material on the inner pole piece adapted to hold said member and winding in position.

4. A lifting magnet having a frame provided with an inner pole piece surrounded by an outer pole piece with an annular recess between said pole pieces, a removable tubular member of magnetic material surrounding the inner pole piece and in magnetic contact therewith, said member carrying an energizing winding adapted to be positioned in said recess, a non-magnetic plate covering said recess, and removable pole shoes of magnetic material on the outer faces of said pole pieces adapted to support said plate and said member.

5. A lifting magnet having a frame provided with an inner and an outer pole piece with a winding space between the same, a tubular magnetic member removably mounted on the inner pole piece, an energizing winding carried by said tubular member, removable covering plates for said winding at opposite ends of said tubular member, and removable pole shoes of magnetic material on the outer faces of said pole pieces, said shoes being adapted to hold said tubular member and one of said plates in position.

6. A lifting magnet having a frame provided with an inner and an outer pole piece with an annular winding space between the same, removable pole shoes of magnetic material on the outer faces of said pole pieces, a removable tubular magnetic member surrounding said inner pole piece and forming a part of the magnetic circuit and carrying an energizing winding arranged in said recess, said pole shoes being adapted to support said member and winding in said recess.

7. A lifting magnet having a frame provided with a continuous recess in one face thereof, an energizing winding arranged in said recess, a magnetic member upon which said winding is wound, said member being removably mounted in said frame and forming a part of the magnetic circuit thereof, and removable pole shoes of magnetic material for said frame adapted to hold said member and winding in place.

8. A lifting magnet having a frame provided with an inner pole piece surrounded by an annular outer pole piece, a tubular magnetic member removably mounted on said inner pole piece and forming a portion of the magnetic circuit thereof, said member having an energizing winding wound thereabout adapted to fit in the recess between said pole pieces and removable pole shoes of magnetic material on the outer faces of said pole pieces adapted to hold the member and winding in place.

9. A lifting magnet having a circular frame, a tubular magnetic member removably mounted within said frame, an energizing winding removable with said tubular member, a plate secured to one end of said tubular member, and a pin carried by said plate and arranged to fit into a recess in said frame to prevent turning of said tubular member.

10. A lifting magnet having a frame provided with inner and outer poles with a winding space between the same, a tubular magnetic member removably mounted on said inner pole and in magnetic contact therewith, an energizing winding coiled around said tubular member, and covering plates for said winding at opposite ends of said tubular member, the plate at the inner

end of said tubular member being secured thereto for supporting said winding in inverted position of said magnet frame and both of said plates being removable from said tubular member to give access to said winding from opposite sides thereof.

11. A lifting magnet having a frame, an energizing winding for said frame, a magnetic member upon which said winding is wound, said member forming a portion of the magnetic circuit of said magnet and being adapted to be inserted in and withdrawn from said frame, and removable pole shoes for said magnet frame adapted to hold said member and said winding in place.

12. A lifting magnet having a circular frame provided with an annular outer pole, a circular member arranged to fit within said frame and having a cylindrical magnetic portion projecting from the center thereof forming a portion of the magnetic circuit of the magnet, a winding coiled around the cylindrical portion of said member, and means for securing said member and said winding in said magnet frame.

13. A lifting magnet having a circular frame provided with an annular outer pole piece, a circular member arranged to fit within said frame and having a magnetic cylindrical portion projecting from the center thereof forming a portion of the magnetic circuit of said magnet, a winding coiled around the cylindrical portion of said member, an annular protecting plate adapted to be placed over the exposed side of said winding, and removable pole shoes for retaining the removable parts in place in said frame.

14. A lifting magnet having a circular frame provided with annular inner and outer pole pieces, a circular plate arranged to fit within the annular recess between the pole pieces and having a tubular magnetic member fitting over the inner pole piece and forming a portion of the magnetic circuit thereof, a winding mounted on said tubular member, an annular protecting plate arranged to close the annular recess in the magnet frame after the winding has been placed therein, and removable pole shoes for securing said protecting plate and said winding in place in said magnet frame.

15. A lifting magnet having a circular frame provided with annular inner and outer pole pieces, a removable annular plate fitting into the recess between said pole pieces, a tubular magnetic member arranged to fit over the inner pole piece and adapted to form a portion of the magnetic circuit of said magnet, said plate being secured to said tubular member, a winding coiled around said tubular member, and a removable pole shoe covering the outer faces of the inner pole piece and arranged to engage and support said tubular member.

16. A lifting magnet having a circular frame provided with annular inner and outer pole pieces, a removable annular plate fitting into the recess between said pole pieces, a tubular magnetic member arranged to fit over the inner pole piece and forming a portion of the magnetic circuit thereof, said plate being secured to said tubular member, a winding coiled around said tubular member, an annular nonmagnetic protecting plate covering the exposed side of said winding, and removable pole shoes of magnetic material covering the outer faces of the inner and outer pole pieces and arranged to retain the removable parts in position.

17. A lifting magnet having a frame, an energizing winding therefor, a removable member within said frame arranged to carry said winding, a terminal block carried by said removable member and connected to the terminals of said winding, binding posts carried by said frame and extending into the same in proximity with said terminal block, and a removable plate on said frame for giving access to the inner ends of said binding posts and said terminal block.

18. A lifting magnet having a frame, a winding within said frame, binding posts on said magnet frame and connected to said winding, supply leads connected to said binding posts, and a removable protecting plate arranged to cover said binding posts and to clamp said supply leads against said magnet frame.

19. A lifting magnet having a frame provided with a removable portion, an energizing winding carried by said removable portion, a terminal device carried by said removable portion and connected to the terminals of said winding, and a removable member on said frame for giving access to said terminal device.

20. A lifting magnet having a frame, an energizing winding, a removable member within said frame and arranged to carry said winding, a terminal block detachably secured to said removable member, reflexed conductors connecting said terminal block to the terminals of said winding, and a removable plate on said magnet frame for giving access to said terminal block and for permitting the withdrawal thereof without withdrawing said removable member.

21. A lifting magnet having a frame, a winding within said frame, terminals on the outside of said frame, insulated supply leads connected to said terminals, and a protecting plate for said terminals detachably secured to said frame and arranged to clamp said leads against said frame.

22. A lifting magnet provided with a circular frame having annular inner and outer poles, a winding arranged within said frame between said poles, a protecting plate for

closing the opening between said poles, and packings between said plate and said poles for rendering the joints between the same substantially air tight, said frame having a plurality of radial grooves on the inside thereof, certain of said grooves communicating with openings through said frame.

23. A lifting magnet having a frame provided with a circular pole, a winding coiled around said pole, an insulating sleeve interposed between said winding and said pole, said sleeve having its end flanged, a layer of insulation arranged on said winding and overlapping the flanged portion of said sleeve, said winding being formed with an annular pocket for receiving the flange of said sleeve whereby said layer of insulation will lie flat against said winding.

24. A lifting magnet having a frame provided with a circular pole, a winding formed of a flat strip of conducting material wound flatwise around said pole, an insulating sleeve interposed between said pole and said winding, said sleeve having at its end a flanged portion, a sheet of insulating material arranged on one side of said winding and overlapping the flanged portion of said sleeve, said winding having its inner turns of reduced width to form an annular groove to receive the flanged portion of said sleeve whereby said sheet of insulating material will lie flat against said winding.

25. A lifting magnet having a circular frame, a removable ring of magnetic material mounted within said frame and forming a portion of the magnetic circuit of said magnet, an energizing winding carried by and removable with said ring, and a circular plate arranged on one side of said winding and detachably secured to said ring, said ring projecting through a central opening in said plate so that the efficiency of the magnetic circuit is not impaired by said plate.

In witness whereof I have hereunto subscribed my name in the presence of two witnesses.

FRANK I. PARKER.

Witnesses:
FRANK H. HUBBARD,
C. W. WUSSOW.