S. WALAS.

CONNECTOR.

APPLICATION FILED MAY 18, 1915.

1,291,297.

Patented Jan. 14, 1919.

Fig. 1.

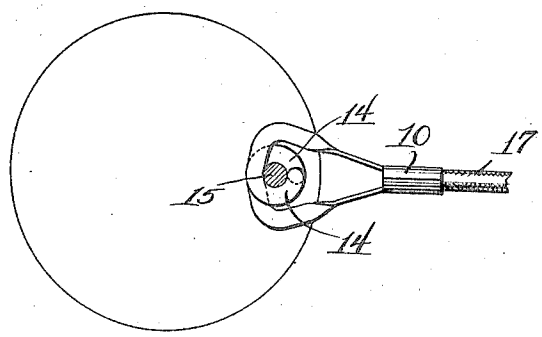

Fig. 3.

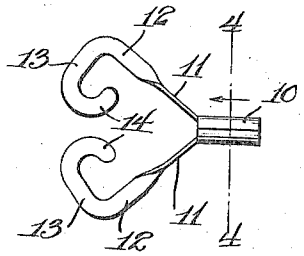

Fig. 2.

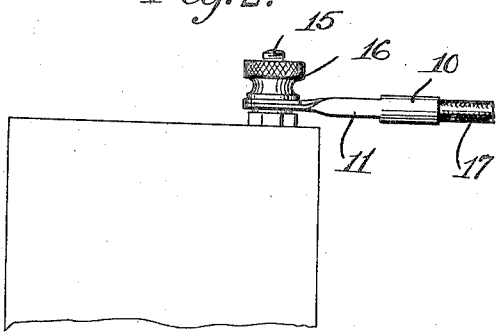

Fig. 4.

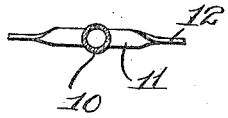

Fig. 5.

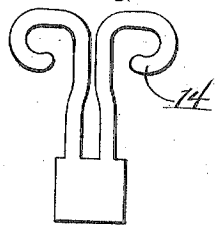

Witnesses

W. B. Mulligan

Wade Koontz

Inventor

Stanley Walas

By Richard Owen,

Attorney

UNITED STATES PATENT OFFICE.

STANLEY WALAS, OF CHICAGO, ILLINOIS.

CONNECTOR.

1,291,297. Specification of Letters Patent. Patented Jan. 14, 1919.

Application filed May 18, 1915. Serial No. 28,880.

To all whom it may concern:

Be it known that I, STANLEY WALAS, a citizen of the United States, residing at Chicago, in the county of Cook and State of Illinois, have invented certain new and useful Improvements in Connectors, of which the following is a specification.

This invention relates to electric cord terminal connectors, and the object of the same is to provide an improved device that is adapted primarily to be employed for connecting wires or conductors to batteries.

Another object of this invention is to provide a connector of the kind above set forth than can be easily and quickly attached to binding posts without removing the ordinary nut therefrom, thus, the same being readily applied in the minimum amount of time.

A still further object of this invention is to provide a connector for batteries of the kind above set forth, that is simple in construction, efficient in operation and consists of a minimum number of parts.

With these and other objects in view, this invention consists of certain novel constructions, combinations and arrangements of parts, as will be hereinafter fully described and claimed.

In the accompanying drawings:

Figure 1 is a top plan view of the device applied to the binding post with its nut removed;

Fig. 2 is a view in elevation of the same as shown in Fig. 1 with the nut in place;

Fig. 3 is a top plan view of the improved connector;

Fig. 4 is a section on the line 4—4 of Fig. 3;

Fig. 5 is a plan of a blank from which this connector is formed.

Referring to the parts by reference numerals, the blank from which the device is formed is shown to advantage in Fig. 5, and the device in its final formation is best shown in Fig. 3. By preference said blank is cut from a sheet of thin metal, originally in the form disclosed in the first-named view and bent into the form disclosed in the last named view. That is say, that one end of the blank of metal is rolled into a stock or sleeve 10 to receive a cord or electric wire, although no novelty is claimed for this exact wire fastening provided a good electric contact between the wire and the device be established at this point. From one end of the sleeve extend two normally divergent arms, each by preference being composed of a portion 11 next to the sleeve, standing on edge in an upright plane, and a portion 12 formed remote from the sleeve and caused to stand in a horizontal plane by giving the spring arm a one-quarter twist as shown in the drawings. The outer end of the spring arm is bent inward, preferably at about right angles as seen, into a hook 13, and as seen in Fig. 2 the two hooks stand in contiguous planes and are quite flat because they are a continuation of the flattened portions 12 of the arms. The bends of the hooks are held normally spaced as shown in Fig. 3, and their bills 14 project outward substantially parallel with their shanks and toward the portions 12, although the tips of the bills are spaced from such portions. This specific construction of parts is given for the purpose which will be stated below.

In use when it is desired to electrically connect a wire 17 with the binding post, the nut 16 on the latter will be run up a little on the post, but not removed. In fact, it is sometimes impossible to remove the nut owing to corrosion upon or injury to the upper end of the post. The operator now grasps the device as shown in Fig. 3 and moves it astride the post as best seen in Fig. 1, and the space between the bends of the two hooks receives the post as will be clear. Now by pressing on the upright portions 11 the hooks are overlapped upon each other and the tips of their bills spaced at a point behind the post, then the operator draws the device reversely, and finally he releases pressure on the arm so that they spring outward and the hooks are drawn into binding engagement against the opposite sides of the post and accidental removal therefrom is obviated. It is, of course, to be understood that the nut 16 can then be threaded on the binding post so as to engage the hooks and therefore prevent any movement of the hook members on the binding post 15.

It is obvious that minor changes may be made in the form and construction of this invention without departing from the material parts thereof. It is therefore not wished to confine the invention to the exact form herein shown and described, but it is wished to include all such as properly come within the scope claimed.

What is claimed is:—

A cord terminal connector comprising wire fastening means, divergent spring arms carried thereby, and hooks on the arms lying in contiguous planes, their shanks projecting inward, their bends normally spaced to receive a binding post, and their bills projecting outward, said hooks being adapted to be overlapped by pressure on the arms and to automatically engage said post when the pressure is released.

In testimony whereof I affix my signature in presence of two witnesses.

STANLEY WALAS.

Witnesses:
JOHN KLOOK,
ALEX. ROZANSKI.