A. R. ROBSON.

BOX AND METHOD OF MAKING SAME.

APPLICATION FILED DEC. 16, 1915.

1,279,589. Patented Sept. 24, 1918.

Fig. 1.

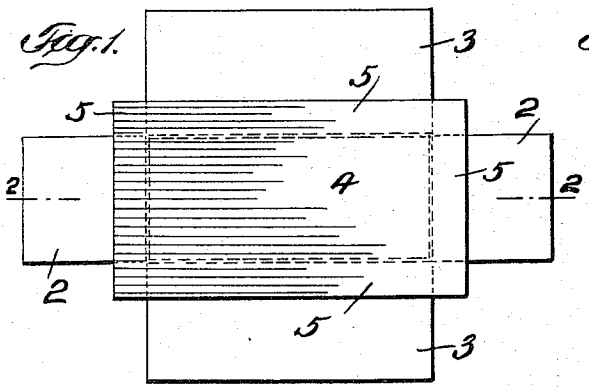

Fig. 3.

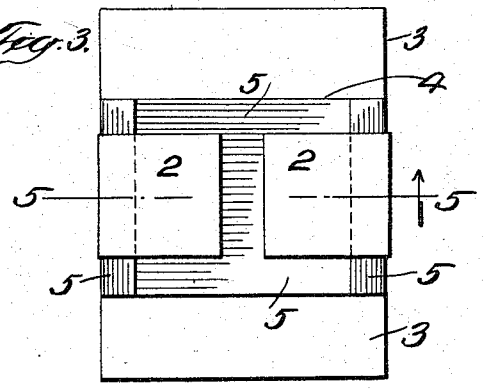

Fig. 2.

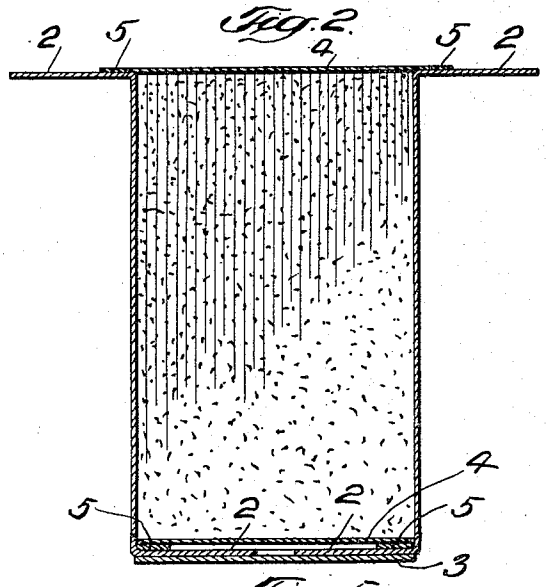

Fig. 4.

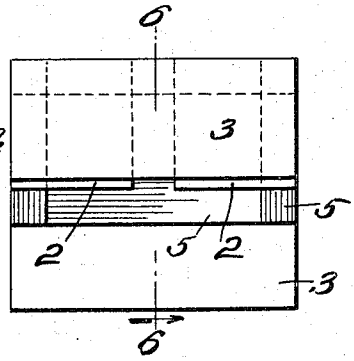

Fig. 7.

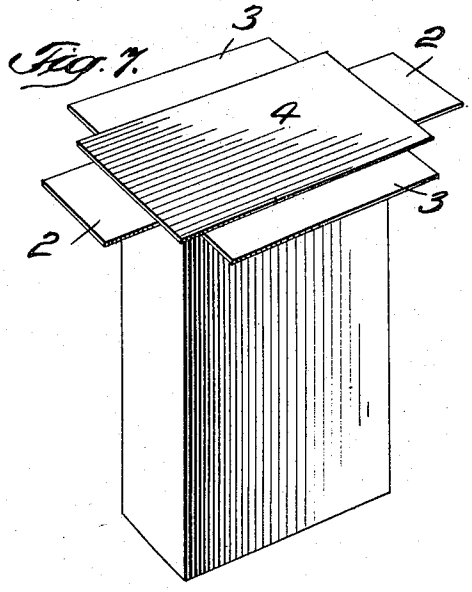

Fig. 5.

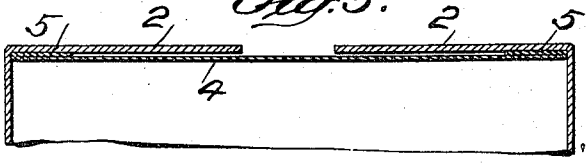

Fig. 6.

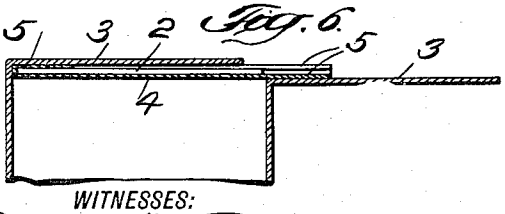

WITNESSES:

INVENTOR

Allan Roy Robson

BY

Archibald Cox

his ATTORNEY

UNITED STATES PATENT OFFICE.

ALLAN ROY ROBSON, OF PHILADELPHIA, PENNSYLVANIA, ASSIGNOR TO FELS & COMPANY, OF PHILADELPHIA, PENNSYLVANIA, A CORPORATION OF PENNSYLVANIA.

BOX AND METHOD OF MAKING SAME.

1,279,589. Specification of Letters Patent. Patented Sept. 24, 1918.

Application filed December 16, 1915. Serial No. 67,142.

To all whom it may concern:

Be it known that I, ALLAN ROY ROBSON, a citizen of the United States, residing at Philadelphia, in the county of Philadelphia, in the State of Pennsylvania, have invented new and useful Improvements in Boxes and Methods of Making Same, of which the following is a specification.

This invention relates to boxes or cartons of card-board, straw-board or other material and has for its object to provide such a box or carton with a closure which will prevent the contents from leaking out, as well as protecting the contents from the atmosphere and from vermin.

In the card-board boxes heretofore used for packing pulverized material, as, for example, soap powder, sugar, flour, etc., great difficulty has been experienced in preventing the powder from leaking at the corners of the box. So difficult has it been to make a paper box which will not leak at the corners that many manufacturers have been forced to line the entire box with a lining which is in effect a paper bag in order to prevent the powder from leaking out at the corners. This is expensive and unsatisfactory, as the paper lining tends to leak at the corners just as the box does.

I have discovered that a box which will not leak at the corners can be made by attaching a sheet of paper to the inner side of the flaps of the box while these are in open position.

In order that my invention may be clearly understood, I will describe the embodiment of it shown in the accompanying drawings, in which—

Figure 1 is an end view of the box with the flaps in open position and the closure-sheet applied to them.

Fig. 2 is a sectional elevation taken on the line 2—2 of Fig. 1 and showing the upper end flaps and closure-sheet in the position shown in Fig. 1 and the lower end flaps and closure-sheet in closed position.

Fig. 3 is an end view of the box showing the position of the closure-sheet after the narrow flaps have been folded in.

Fig. 4 is an end view of the box showing the position of the closure-sheet after the two narrow flaps and one broad flap have been folded in.

Fig. 5 is a fragmentary sectional elevation taken on the line 5—5 of Fig. 3 showing the narrow flaps and the closure-sheet in the same position as shown an Fig. 3.

Fig. 6 is a fragmentary sectional elevation taken on the line 6—6 of Fig. 4 showing the flaps and closure-sheet in the same position as shown in Fig. 4.

Fig. 7 is a perspective view of the box with the top flaps open and the closure-sheet applied to them, as in Fig. 1.

I first construct a box of card-board, straw-board or other material, pasted together along one side. Each of the sides of the box is extended in each direction to form the end flaps, 2, 3. I then open the end flaps 2, 3, at one end of the box, so that they extend outwardly at right-angles to the sides of the box, as illustrated in Figs. 1, 2, 7. The tight closure of this end of the box is effected by means of a sheet of paper or other material, 4, larger than the transverse cross-section of the box. While the flaps are in the position shown in Figs. 1, 2, 7, I attach the marginal portions of the closure-sheet 4 to the inner surfaces of the flaps. The portions of the sheet which are attached to the end flaps are indicated at 5. Two opposite end flaps, preferably the narrow ones, 2, are then folded inwardly, the edges of the sheet 4 which are attached to these flaps being folded in with them, so that the sheet 4 assumes the position shown in Fig. 3. The broad end flaps 3 are then folded in successively (Fig. 4). By this means a closure is formed at one end of the box through which no powder can sift. The box is then filled and the other end closed by another closure-sheet 4 in the way described.

Various different means of attaching the closure-sheet to the flaps and of attaching the flaps to each other so that they will stay folded, may be used, the means varying according to the material of which the box and the closure-sheet are made. If the box and sheet are of a material to which an adhesive, such as glue, paste or the like, will adhere, the attaching of the closure-sheet may be effected as follows: After the flaps have been extended outward at right-angles to the sides of the box, adhesive is applied to the inner surface of all the flaps. The closure-sheet is then placed in the position shown in Figs. 1, 2 and 7, and its marginal portions are attached to the flaps by the adhesive upon them. The flaps are then folded inwardly in the way described and the adhe-

sive on the narrow flaps adheres to the central portion of the closure-sheet, while the adhesive on the wide flaps attaches them to the narrow flaps and to each other.

If the carton or the closure-sheet be impregnated with wax to render it moisture-resisting, the attachment of the closure-sheet to the flaps may be effected by heat and pressure in the way in which a seal of wax paper is customarily effected.

While I have described the use of the closure-sheet at both ends of the box, it can, of course, if preferred, be used at one end only. It should be understood also that my invention is not limited to the rectangular carton shown in the drawings, but may be embodied in cartons of other shapes. Besides providing a box through which no powder can sift, my invention results in a box which is substantially moisture-proof, particularly if the box and closure-sheet be made of moisture-resisting material. The box which I have invented also effectively protects the contents from vermin.

What I claim is:—

1. A box having end flaps, and a closure sheet at the inner surfaces of said end flaps and extending across the space between edges of adjacent flaps when in unfolded position.

2. A box having end flaps, and a closure sheet attached to the inner surfaces of said end flaps and extending across the space between edges of adjacent flaps when in unfolded position.

3. A box having end flaps, and a closure sheet extending entirely across the end of the box and onto the inner surfaces of the flaps, and across the space between edges of adjacent flaps when in unfolded position.

4. A box having end flaps, and a closure sheet at the inner surfaces of said end flaps, said closure sheet having a corner extension overlapping two adjacent flaps on their inner faces at a corner of the box, when the flaps are in folded position.

5. A box having end flaps, and a closure sheet attached to the inner surfaces of said end flaps, said closure sheet having a corner extension overlapping two adjacent flaps on their inner faces, at a corner of the box, when the flaps are in folded position.

6. A box having end flaps, and a closure sheet extending entirely across the end of the box and onto the inner surfaces of the flaps, said closure sheet having extensions at separate corners of the box overlapping two adjacent flaps on their inner faces, at the separate corners of the box, when the flaps are in folded position.

ALLAN ROY ROBSON.