W. L. MILLER.

FLUID PRESSURE CHUCK ACTUATING DEVICE.

APPLICATION FILED FEB. 18, 1914.

1,146,193.

Patented July 13, 1915.

2 SHEETS—SHEET 1.

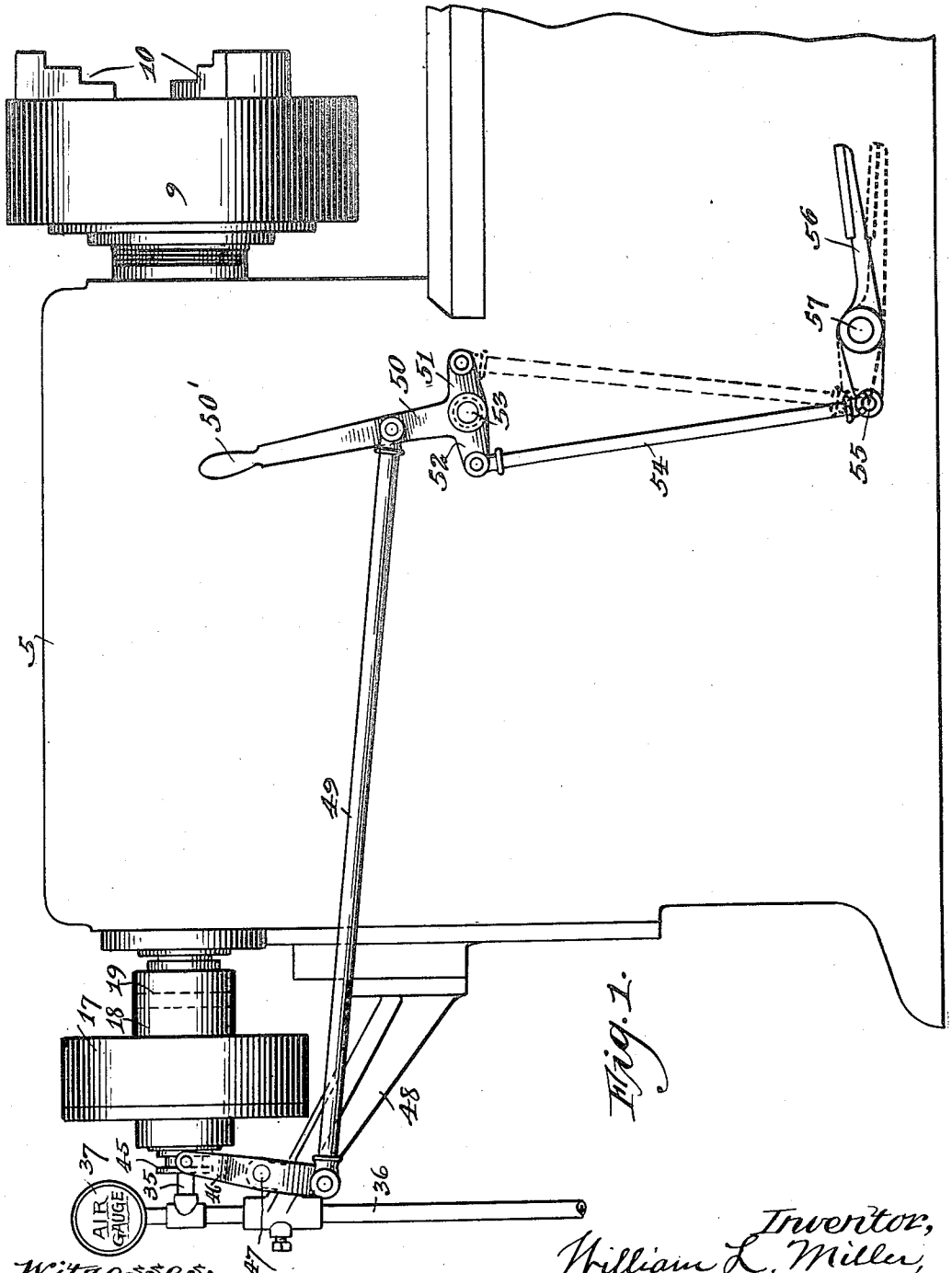

Fig. 1.

Witnesses,
L. S. Mann,
S. N. Pond

Inventor,
William L. Miller,
By Offield, Towle, Graves & Offield,
Attys.

W. L. MILLER.

FLUID PRESSURE CHUCK ACTUATING DEVICE.

APPLICATION FILED FEB. 18, 1914.

1,146,193.

Patented July 13, 1915.

2 SHEETS—SHEET 2.

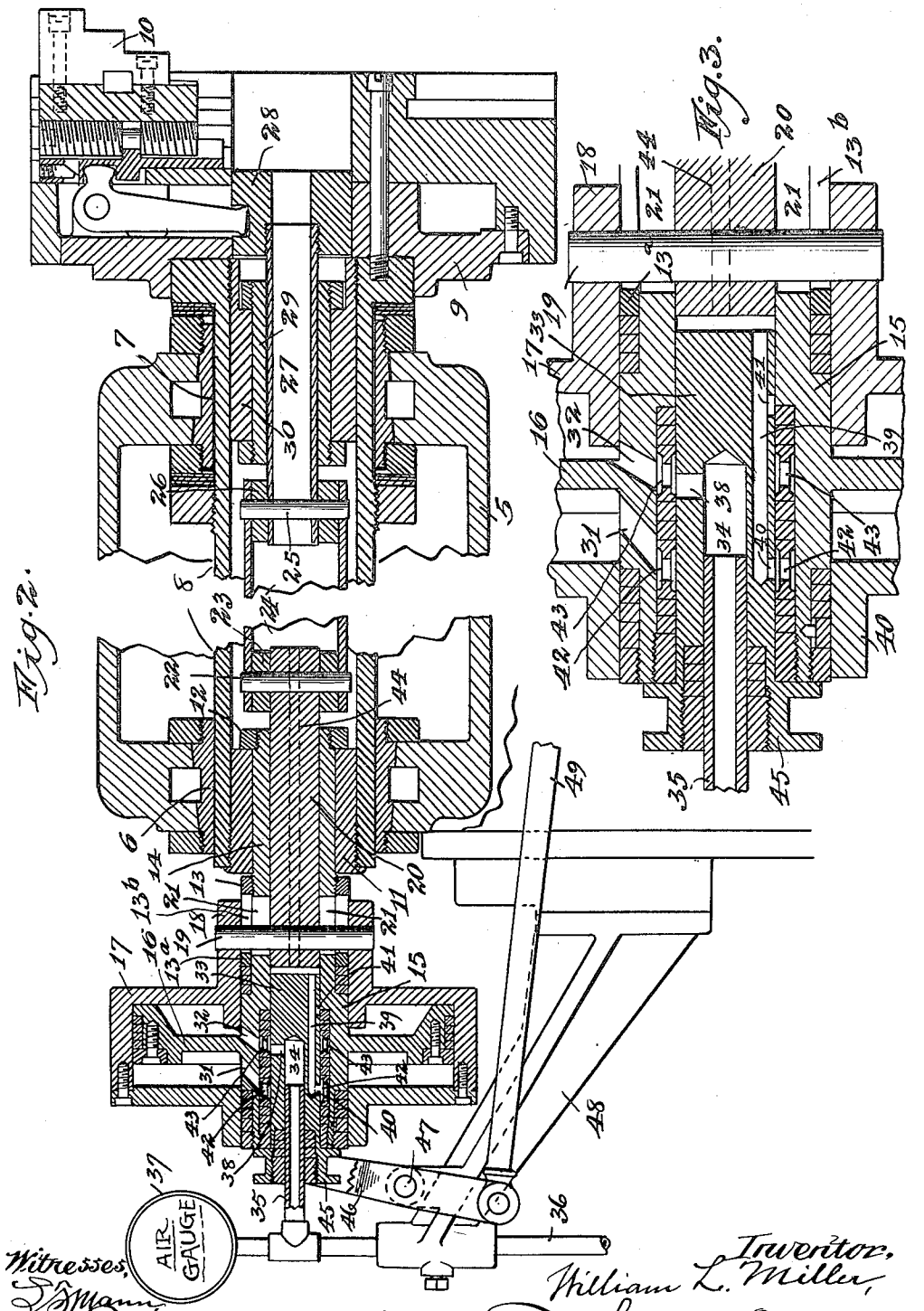

Witnesses,
S. N. Ford

Inventor,
William L. Miller,
By Offield, Towle, Graves & Offield,
Attys.

UNITED STATES PATENT OFFICE.

WILLIAM L. MILLER, OF MADISON, WISCONSIN, ASSIGNOR TO GISHOLT MACHINE COMPANY, OF MADISON, WISCONSIN, A CORPORATION OF WISCONSIN.

FLUID-PRESSURE CHUCK-ACTUATING DEVICE.

1,146,193. Specification of Letters Patent. Patented July 13, 1915.

Application filed February 18, 1914. Serial No. 819,367.

To all whom it may concern:

Be it known that I, WILLIAM L. MILLER, a citizen of the United States, residing at Madison, in the county of Dane and State of Wisconsin, have invented certain new and useful Improvements in Fluid-Pressure Chuck-Actuating Devices, of which the following is a specification.

This invention relates to power-operated chucks, lathes, screw machines, and all similar machines employing chucks, and has reference more particularly to that type of power-operated chucks wherein the chucking devices are actuated in one or both directions by fluid pressure acting upon a piston contained within a cylinder.

More specifically, my present invention relates to that type of power-operated chucks wherein the piston and cylinder are so connected to the outer end of the spindle as to rotate within the latter. In chucks of this type, however, so far as I am aware, it has heretofore been the practice to mount the cylinder upon the outer end of the spindle, and connect the piston to the endwise movable chuck-actuating member commonly located within the spindle.

My present invention reverses this arrangement, the cylinder being connected to the endwise movable chuck-actuating member and constituting the active or movable member of the motor, and the piston being connected to the spindle and constituting the stationary or passive member of the motor. This arrangement is preferred by me in my present invention by reason of facilitating the distribution of the motive fluid through the agency of an endwise movable hollow ported valve mounted within the hub of the piston.

The principal objects of the invention are, to provide a simple and very compact fluid pressure motor device for imparting longitudinal movement to the chuck-actuating tube or bar that usually extends through the hollow spindle, to provide an improved valve arrangement for admitting and exhausting the motive fluid, to provide a support for the outer ends of the cylinder and piston hubs which shall serve the additional function of supplying the motive fluid to the interior of a sliding valve controlling the admission and exhaust, to provide a device wherein the cylinder reciprocates over the piston, instead of the piston reciprocating in the cylinder, to provide a construction wherein the exhaust from the motor may be utilized to clear the bore of the chuck of chips, dust, and the like, and, generally, to provide an improved and highly efficient device of the character specified.

My invention also includes a novel interchangeable operating mechanism for the valve of the chuck-actuating motor which, by a slight change in the manner of connecting up certain of its parts, enables the operator, by the same movement of a foot lever, to effect either external or internal chucking of the work according to the character of the latter.

The manner and means in and by which the stated objects of the invention are secured will be readily understood from the following description when taken in connection with the accompanying drawings showing one practical embodiment of the invention, and in which—

Figure 1 is a side elevation of the headstock end of a lathe showing the chucking mechanism, the power devices for operating the same, and the valve-actuating mechanism. Fig. 2 is an enlarged axial vertical section through the headstock frame, spindle, chuck and chuck-operating mechanism, the headstock frame and spindle being broken out between their ends. Fig. 3 is an enlarged sectional view of the valve mechanism shown at the left of Fig. 2.

Referring to the drawings, 5 designates a portion of the headstock frame of a lathe or like machine, and 6 and 7 the outer and inner bearings in which is journaled a hollow spindle 8, to the inner end of which is secured a chuck-head 9 carrying chucking-mechanism of well known form and construction, including radially movable external chucking jaws 10. The spindle 8 is provided, between the bearings 6 and 7, with suitable driving gear (not shown); and secured within the outer end of the spindle 8 is a sleeve or bushing 11 within which is secured, by a nut 12, a tubular member 14 that constitutes an integral sleeve-like extension of the hollow hub 15 of a piston 16.

Surrounding the piston 16 is a cylinder 17, this latter also having a hollow hub extension 18 surrounding the hub 15 of the piston. To this cylinder hub 18 is secured by means of a cross-pin 19 a rod 20 that forms part of an endwise movable chuck-actuating member, and is slidably mounted within the sleeve-extension 14 of the piston hub, said sleeve-extension being longitudinally slotted at 21 to admit the passage of the pin 19. The pin 19 also extends through a slot 13^b formed in a packing gland 13^a surrounding the hub extension 14, said gland being confined by a nut 13. To the opposite or inner end of the rod 20 is secured, by a cross-pin 22 and spacing sleeve 23 a tubular connector 24, the inner end of this latter being similarly secured by a cross-pin 25 and spacing sleeve 26 to a smaller tubular member 27, the inner end of which latter has a screw-threaded connection to the lever-actuating block 28 of the chucking mechanism; the tubular member 27 being shown as guided and supported in a sleeve 29 in turn mounted within a spacing sleeve 30 contained within the inner end of the spindle 8.

The hollow hub 15 of the piston 16 is formed with a pair of ports 31 and 32 leading to opposite sides of the piston. Slidably mounted within the hollow hub 15 is a valve-block 33 containing a central axial bore 34 that engages an air-supply pipe 35 entering the outer end of the valve-block 33, the stationary air-supply pipe 35 being a branch of a main air-supply pipe 36 leading from a source of compressed air and preferably equipped with an air-gage 37. The valve-block 33 is further provided with a radial supply port 38, a longitudinal exhaust duct 39 opening through the inner end of the valve-block 33, and a pair of exhaust ports 40 and 41 connecting the exhaust duct 39 with the circumference of the valve-block 33. Surrounding the valve-block 33 opposite the ports 31 and 32 of the piston hub are a pair of suitably packed externally and internally channeled and ported rings 42 and 43 serving to connect the main supply and exhaust ports 31 and 32 of the piston hub with the ports 38, 40 and 41 of the valve-block. Suitable packing rings and glands are employed to secure air-tight joints between the cylinder hub and the piston hub, between the piston hub and the valve, and between the valve and the air-supply pipe 35, as indicated in the drawing; but as no novelty is claimed for these packing devices, they are not described in detail herein.

To facilitate the exhaust, the solid section 20 of the chuck-actuating member is provided with a longitudinal groove 44 in its outer surface extending from end to end thereof.

Referring next to the valve-actuating mechanism which I prefer to employ, 45 designates a circumferentially grooved outer end extension of the valve-block 33 that is engaged by the upper end of a forked lever 46 pivoted at 47 to a supporting bracket 48 on the main frame of the machine; and the lower end of the lever 46 is connected by a link 49 to the upwardly extending arm 50 of a double bell crank lever, the other arms 51 and 52 of which extend in opposite directions, said bell crank lever being pivoted to the frame of the machine at 53, at a point coincident with the intersection of the longitudinal axes of its three arms. 54 is a substantially vertical link, the upper end of which is pivoted to the outer end of either the arm 52 or the arm 51 of the double bell crank lever, and its lower end is pivoted at 55 to the forward end of a pedal lever 56, this latter being pivotally mounted at 57 on the side frame of the machine. The upwardly extending arm 50 of the bell-crank lever is preferably extended beyond the connection of the link 49 thereto to form a hand lever 50′ for manually unchucking the work.

The chuck-head is herein shown as equipped with externally clamping jaws 10 which grip the work upon an inward movement of said jaws, and the chucking mechanism is shown in Fig. 2 in a position in which the jaws would be engaged with the work. The valve 33 has, however, been shifted by an upward swing of the pedal lever 56 or a backward movement of the hand lever 50′ (Fig. 1) to a position in which the compressed air is just being admitted through ports 38, 43, and 32 to the right-hand side of the piston 16, while the exhaust on the opposite side of the piston is just beginning through ports 31, 42, and 40, duct 39, and duct 44. This will cause a shifting of the cylinder 17 to the right, thereby retracting the chuck jaws and releasing the work. When a fresh piece of work has been placed between the chuck-jaws, the operator will then depress the pedal lever 56 and this, through the described connections, will draw the valve 33 to the extreme of its outward movement, thereby reversing the air-supply and exhaust connections relatively to the opposite sides of the piston, admitting air to the left side of the piston as shown in Fig. 2 and exhausting from the right side of the piston. This will cause an outward or backward travel of the cylinder 17 which effects an inward or work-gripping movement of the chuck-jaws.

Now, if the chuck be equipped with internally gripping jaws, that is, jaws which engage the work internally by an outward travel, the connecting link 54 is shifted from the arm 52 to the arm 51 of the double bell-crank lever, as shown by dotted lines in Fig. 1, so that it is connected to the latter on the other side of the pivot 53. When this is done, the depression of the pedal lever

56 by the operator will shift the valve in such a way as to effect an outward or gripping movement of the chuck-jaws, while the lifting of the foot pedal or pulling forward of the hand lever will effect an inward or releasing movement of the chuck-jaws. The double bell-crank lever, with the connecting link 54 shiftable to either side of the pivot thereof, therefore, enables the same movement of the pedal lever to effect a chucking movement of either externally gripping or internally gripping chuck-jaws upon the work, and preferably this chucking movement of the jaws is effected through a depression of the pedal lever, while the unchucking movement is effected through a forward or backward swing of the hand lever.

From the foregoing, it will be observed that the supply and exhaust of the motive fluid is fully controlled by a single sliding valve that is in constant communication with the fluid pressure supply pipe, and has a simple reciprocating movement to effect the operation of the motor and the consequent chucking and unchucking of the work. By connecting the piston to the spindle, and the cylinder to the chuck-actuating member, the cylinder has the reciprocating movement. This possesses the advantage of enabling the operator to determine at a glance, by observing the movement of the cylinder, whether or not the motor is operating properly when the valve is actuated. It will also be noted that the exhaust through the hollow chuck-actuating member has the effect of blowing chips and dust out of the bore of the chuck, thereby tending to keep the latter clean.

To those familiar with the art it will be manifest that the specific details shown and described may be varied within the principle of the invention as defined by the appended claims and without affecting the results obtained. The admission and exhaust of the motive fluid to the motor by means of an endwise slidable valve mounted co-axially with and operating within the hollow piston hub is believed to be new, and, obviously, might be employed to advantage in a structure wherein either the cylinder or piston constitutes the endwise movable chuck-actuating element of the motor.

I claim—

1. In a fluid pressure chuck actuating device, the combination with a headstock frame, and a hollow spindle mounted therein, of chucking mechanism carried thereby, an endwise movable chuck-actuating member within said spindle, a piston rigidly connected to said spindle, a cylinder containing said piston and connected to said chuck-actuating member, and means for controlling the flow of motive fluid to and from the opposite sides of said piston.

2. In a fluid pressure chuck actuating device, the combination with a headstock frame, and a hollow spindle mounted therein, of chucking mechanism carried thereby, an endwise movable chuck-actuating member within said spindle, a cylinder and contained piston, one of which is connected to said chuck-actuating member and the other to said spindle, said piston having a hollow ported hub, a hollow ported valve in said piston hub, and means for admitting motive fluid to said valve.

3. In a fluid pressure chuck actuating device, the combination with a headstock frame, and a hollow spindle mounted therein, of chucking mechanism carried thereby, an endwise movable chuck-actuating member within said spindle, a cylinder and contained piston, one of which is connected to said chuck-actuating member and the other to said spindle, said piston having a hollow ported hub, a hollow ported valve slidably mounted in said piston hub, and a supply pipe for motive fluid entered into the outer end of said valve.

4. In a fluid pressure chuck actuating device, the combination of a hollow spindle, a chuck-actuating member slidably mounted in said spindle, a cylinder having a hollow hub connected to said chuck-actuating member, a piston in said cylinder having a hollow hub formed with ports leading to both sides of the piston and with a hub extension connected to the spindle, an axially bored valve-block slidably mounted in said piston hub and formed with supply and exhaust ducts, and a fixed motive fluid supply pipe in continuous communication with the axial bore of said valve-block.

5. In a fluid pressure motor for chucks, the combination with a hollow chuck spindle, and a chuck-actuating member mounted in said spindle for endwise movement, of a piston having a hub secured to the outer end of said spindle, a cylinder inclosing said piston, and having a hub slidably mounted on the hub of said piston, means connecting said cylinder to said chuck-actuating member, and means for admitting and exhausting motive fluid to and from opposite sides of said piston.

6. In a fluid pressure motor for chucks, the combination with a hollow chuck spindle, and a chuck-actuating member mounted in said spindle for endwise movement, of a piston having a slotted hub secured to the outer end of said spindle, a cylinder inclosing said piston and having a hub slidably mounted on the slotted hub of said piston, a key connecting said cylinder hub to said chuck-actuating member and extending through the slot of said piston hub, and means for admitting and exhausting motive fluid to and from opposite sides of said piston.

7. In a fluid pressure motor for chucks,

the combination with a hollow spindle, and a chuck-actuating member mounted in said spindle for endwise movement, of a cylinder and piston, one of which is connected to said spindle and the other to said chuck-actuating member, the hub of said piston being hollow and ported to both faces of the latter, a hollow slide valve in said hollow piston hub formed with supply and exhaust ports, and means for supplying motive fluid to the interior of said hollow valve.

8. In a fluid pressure motor for chucks, the combination with a hollow spindle, and a chuck-actuating member mounted in said spindle for endwise movement, of a piston having a hub secured to said spindle, a cylinder inclosing said piston and having a hub connected to said chuck-actuating member, the hub of said piston being hollow and ported to both faces of the latter, a hollow slide valve in said hollow piston hub formed with supply and exhaust ports, and means for supplying motive fluid to the interior of said hollow valve.

9. In a fluid pressure motor for chucks, the combination with a hollow spindle, and a chuck-actuating member mounted in said spindle for endwise movement, of a cylinder and piston, one of which is connected to said spindle and the other to said chuck-actuating member, the hub of said piston being hollow and ported to both faces of the latter, a hollow slide valve in said hollow piston hub formed with supply and exhaust ports, a fluid pressure supply pipe having a nozzle extending within said hollow valve, and means for reciprocating said valve over said nozzle.

10. In a fluid pressure motor for chucks, the combination with a hollow spindle, and a chuck-actuating member mounted in said spindle for endwise movement, of a piston having a hub secured to said spindle, a cylinder inclosing said piston and having a hub connected to said chuck-actuating member, the hub of said piston being hollow and ported to both faces of the latter, a hollow slide valve in said hollow piston hub formed with supply and exhaust ports, a fluid pressure supply pipe having a nozzle extending within said hollow valve, and means for reciprocating said valve over said nozzle.

11. In a fluid pressure chuck-actuating mechanism, the combination with a spindle, and a chuck-actuating member mounted for endwise movement relatively to said spindle, of a fluid pressure motor for actuating said chuck-actuating member, and means for conducting the exhaust from said motor to the bore of the chuck, whereby to free the latter from chips and dust.

12. In a fluid pressure chuck-actuating mechanism, the combination with a spindle, and a hollow chuck-actuating member mounted for endwise movement relatively to said spindle, of a fluid-pressure motor for actuating said chuck-actuating member having means for directing its exhaust into the latter, whereby to free the bore of the chuck from chips and dust.

13. In a fluid pressure chuck-actuating mechanism, the combination with a hollow spindle, and a hollow chuck-actuating member mounted in said spindle for endwise movement, of a fluid-pressure motor for actuating said chuck-actuating member having means for directing its exhaust into the latter, whereby to free the bore of the chuck from chips and dust.

14. In a fluid pressure chuck-actuating mechanism, the combination with a hollow spindle, and a hollow chuck-actuating member mounted in said spindle for endwise movement, of a double-acting fluid-pressure motor including a piston connected to said spindle and a cylinder connected to said chuck-actuating member, said piston having a hollow ported hub, an axially bored slide valve mounted in said hollow piston hub, a stationary fluid pressure supply pipe entering the bore of said valve, and means for conducting the exhaust of said motor into said hollow chuck-actuating member, whereby to free the bore of the chuck from chips and dust.

15. In a fluid pressure chuck actuating device, the combination with a hollow spindle, chucking mechanism mounted on the inner end thereof, and an endwise movable chuck-actuating member within said spindle, of a fluid pressure motor operatively connected to said chuck-actuating member, a valve controlling the admission and exhaust of motive fluid to and from said motor, said valve when moved in one direction effecting through said motor and chuck-actuating member an inward movement of the work-engaging elements of the chucking mechanism, and when moved in the opposite direction effecting an outward movement of the work-engaging elements of the chucking mechanism, a valve-actuating lever, and changeable connections between said lever and said valve whereby a movement of said lever in a given direction may actuate said valve in either direction.

16. In a fluid pressure chuck actuating device, the combination with a hollow spindle, chucking mechanism mounted on the inner end thereof, and an endwise movable chuck-actuating member within said spindle, of a fluid pressure motor operatively connected to said chuck-actuating member, a valve controlling the admission and exhaust of motive fluid to and from said motor, said valve when moved in one direction effecting through said motor and chuck-actuating member an inward movement of the

work-engaging elements of the chucking mechanism, and when moved in the opposite direction effecting an outward movement of the work-engaging elements of the chucking mechanism, a pivoted foot lever, and changeable lever and link connections between said foot lever and said valve whereby a movement of said foot lever in a given direction may actuate said valve in either direction.

WILLIAM L. MILLER.

Witnesses:
E. R. SEWARD,
O. M. OLSEN.