J. PFARRHOFER.

MUSIC SHEET TURNING DEVICE.

APPLICATION FILED JULY 24, 1911.

1,028,270.

Patented June 4, 1912.

2 SHEETS—SHEET 1.

Fig. 1.

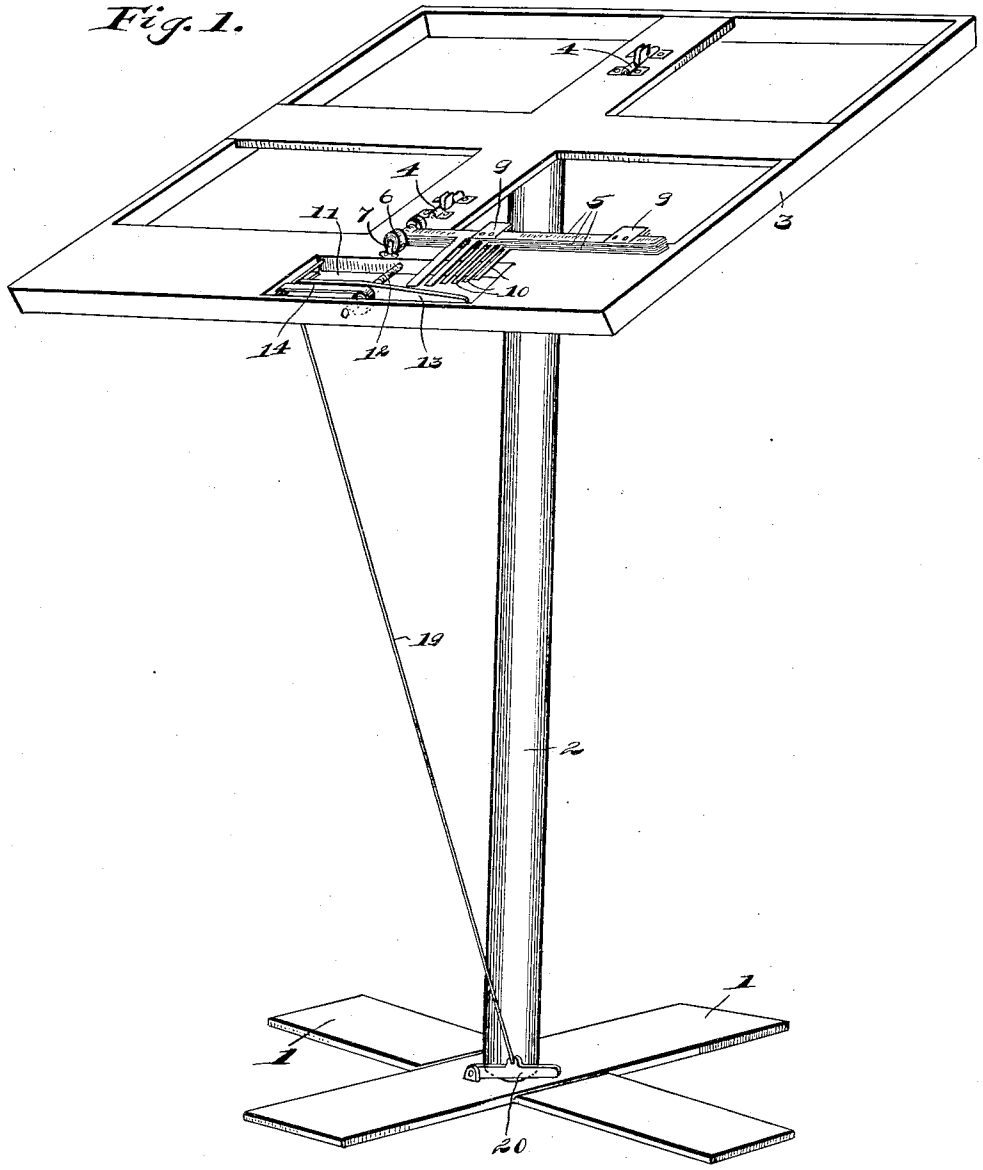

Witnesses:

C. E. Wessels.

A. A. Olson.

Inventor:

Joseph Pfarrhofer,

By Joshua R. H. Potts

his Attorney.

J. PFARRHOFER.

MUSIC SHEET TURNING DEVICE.

APPLICATION FILED JULY 24, 1911.

1,028,270.

Patented June 4, 1912.

2 SHEETS—SHEET 2.

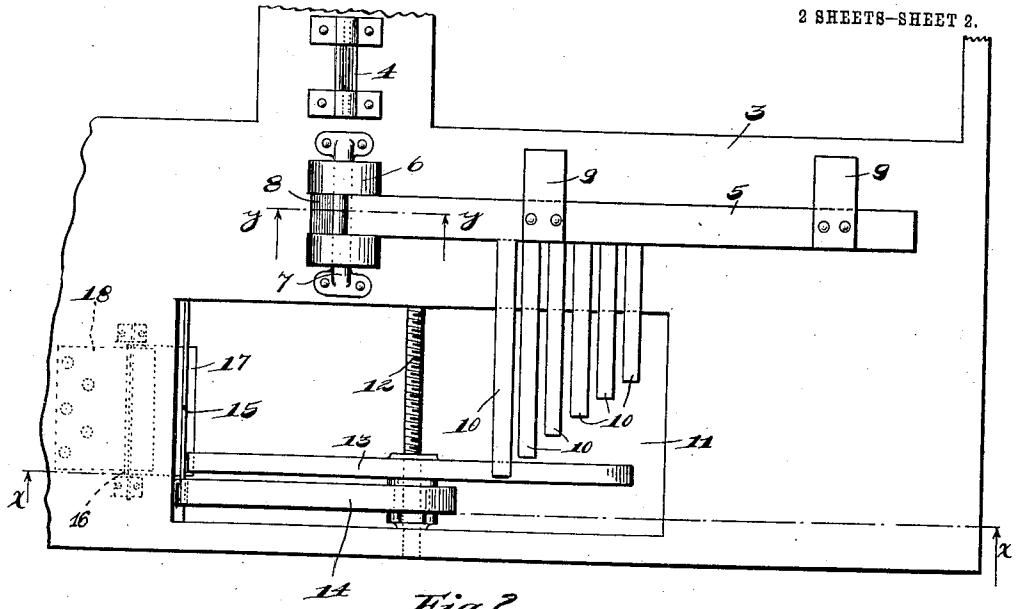

Fig. 2.

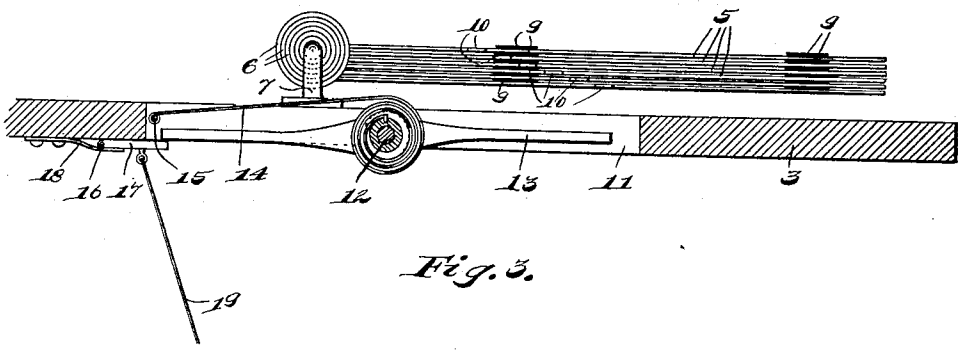

Fig. 3.

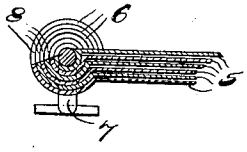

Fig. 4.

Witnesses:

C. E. Wessels.

A. A. Olson.

Inventor:

Joseph Pfarrhofer,

By Joshua R. H. Potts

his Attorney.

UNITED STATES PATENT OFFICE.

JOSEPH PFARRHOFER, OF CHICAGO, ILLINOIS.

MUSIC-SHEET-TURNING DEVICE.

1,028,270. Specification of Letters Patent. Patented June 4, 1912.

Application filed July 24, 1911. Serial No. 640,174.

To all whom it may concern:

Be it known that I, JOSEPH PFARRHOFER, a subject of the Emperor of Austria-Hungary, and a resident of the city of Chicago, county of Cook, and State of Illinois, have invented certain new and useful Improvements in Music-Sheet-Turning Devices, of which the following is a specification.

My invention relates to improvements in music sheet turning devices, that is to devices adapted for use in effecting the mechanical turning of music sheets so as to leave the hands free for operation upon the instrument used.

The object of my invention is the production of a music sheet turner as mentioned which will be of improved construction and of high efficiency in operation.

Other objects will appear hereinafter.

With these objects in view my invention consists in the combinations and arrangements of parts hereinafter described and claimed.

My invention will be best understood by reference to the accompanying drawings forming a part of this specification, and in which,

Figure 1 is a perspective view of a music stand to which is applied a music sheet turning mechanism embodying my invention, Fig. 2 is an enlarged detail fragmentary top plan view of the lower edge portion of the music rest of the stand, Fig. 3 is a section taken on line *x—x* of Fig. 2, and Fig. 4 is a section taken on line *y—y* of Fig. 2.

The preferred form of my construction as illustrated in the drawings comprises a music stand consisting of a base 1, standard 2 and music rest 3, the latter being of usual form and construction. Provided upon the upper side of the rest 2 medially thereof are pivotally mounted clips 4 which are adapted to engage the backs of the music sheets arranged upon the rest, said clips serving to maintain the music in proper position upon the stand so that the individual sheets may be readily turned in the manner herein described.

Arranged adjacent the lower edge of the rest 3 is a plurality of pivotally mounted turning arms 5, the tubularly formed inner ends 6 of said arms which are mounted one within the other, as clearly shown in Figs. 3 and 4, being pivotally mounted upon the inverted substantially U-shape bearing member 7 which is secured rigidly to the rest 3 centrally of the lower edge thereof. In order to permit of turning of the arms 5, that is of the uppermost thereof independent of the others, the tubular portions 6 of said arms are slotted as at 8; said construction as will be observed permitting of successive turning of said arm 5 commencing with the uppermost thereof. Each of said arms 5 is provided with spring clips 9 which are adapted to engage the lower edge of a music sheet for fastening the latter to the former and so that when the former is turned the sheet will be carried therewith.

Projecting downwardly from the arms 5 are fingers 10 of progressively increasing length, the uppermost of said arms, when the latter are arranged as shown in the drawings being provided with the longest finger 10. Formed at the lower edge of the rest 3 below the fingers 10 is a rectangular slot or opening 11. Arranged in the opening 11 substantially centrally therein is a stationary screw 12 extending substantially parallel with the fingers 10. Threaded midway its extremities upon the screw 12 is a bar 13 which is freely rotatable upon said screw, said bar being so positioned that, when rotated, the same will be adapted to engage the fingers 10 to effect turning of the arms 5. By reason of said bar being in threaded connection with the screw 12 upon rotation of said bar in a counter clockwise direction the same will move upon said screw toward the fingers 10 for successive engagement of the latter; the screw 12 being provided with a left hand thread in order to effect such movement of said bar. Rotation of said bar 13 is effected through the medium of a spiral or clock spring 14 which is secured at its inner extremity to the hub of said bar, the outer extremity of said spring being slidably secured to a bar 15 which extends parallel with the screw 12. Said spring 14 is adapted, when the same has been properly wound, to impart the desired rotation to said bar 13, the outer end of said spring being slidably secured as stated so that when the bar 13 and hence the inner end of the spring is moved along screw 12, the outer end of said spring will automatically follow and constantly remain coplanar with the body or the inner end thereof.

Pivoted at 16 upon the under side of the rest 3 adjacent the left hand edge of the opening 11 is an elongated stop or detent 17 the free end of which is adapted to traverse the path of the extremities of the bar 13 so as to prevent rotation of the latter. Said stop is of a length corresponding with the amplitude of movement of said bar along the screw 12 so that said stop will be adapted to coöperate with said bar at all of its operative positions upon said screw. Said stop is held normally in elevated or operative position through the medium of a leaf spring 18. Downward rocking of the free end of said stop to releasing position is effected through the medium of a cord 19 which is pulled downwardly to effect such rocking of said stop by means of a foot operable pedal 20 pivotally secured at the base 1 of the stand.

In the operation of the device the spring 14 is first wound by reversely rotating the bar 13, the stop 15 being depressed and the arms 5 turned to rest upon the left hand side of the rest 3 during this operation in order to permit of such movement of said bar, the fingers 10, when said arms 5 are positioned as mentioned, being positioned beyond the path of the extremities of said bar. The arms 5 are then returned to normal position or that shown and the music to be rendered is then secured in the clips 4 with the backs of the sheets engaged by said clips. The lower edges of the successive sheets are then engaged by the clips 9 of the arms 5. When it is desired to turn the music sheets, it is only required to depress the pedal 20, the successive depressions of said pedal effecting the successive turning of the sheets engaged by the arms 5. With this arrangement then it will be seen that the hands of the musician will be free for engagement with his instrument at all times, the turning of the music being controlled by the foot thereby obviating interruption in the rendition of the music which otherwise results at each turning of the music sheets.

The construction set forth is durable and economical, the same may be readily operated and is not susceptible to readily becoming inoperable.

While I have illustrated and described the preferred construction for carrying my invention into effect, this is capable of variation or modification without departing from the spirit of the invention. I, therefore, do not wish to be limited to the exact details of construction set forth, but desire to avail myself of such variations and modifications as come within the scope of the appended claims.

Having described my invention what I claim as new and desire to secure by Letters Patent is:

1. In a device of the class described, the combination of a series of turning arms pivotally mounted, said arms being provided with projecting fingers of progressively increasing length; a stationary screw; a freely rotatable bar threaded upon said screw, said bar being adapted when rotated to travel upon said screw toward said fingers and successively engage the latter to effect turning thereof; an oscillatory stop adapted to prevent rotation of said bar; resilient means for normally holding said stop in operative position; foot operable means for oscillating said stop to release said bar; and a spring for rotating said bar when released, substantially as described.

2. In a device of the class described, the combination of a series of turning arms pivotally mounted, means on said arms for engaging music sheets for turning, said arms being provided with projecting fingers of progressively increasing length; a stationary screw; a freely rotatable bar threaded upon said screw, said bar being adapted when rotated to travel upon said screw toward said fingers and successively engage the latter to effect turning thereof; an oscillatory stop adapted to prevent rotation of said bar; a spring for normally holding said stop in operative position; foot operable means for oscillating said stop to release said bar; and a spring for rotating said bar when released, substantially as described.

3. In a device of the class described, the combination with a music stand having a music sheet rest, of a series of turning arms pivotally mounted upon said rest adjacent the lower edge thereof, said arms being provided with projecting fingers of progressively increasing length; a stationary screw mounted in said rest adjacent the lower edge thereof; a rotatable bar threaded upon said screw, said bar being adapted when rotated to travel upon said screw toward said fingers and successively engage the latter to effect turning thereof; an oscillatory stop adapted to prevent rotation of said bar; resilient means for normally holding said stop in operative position; foot operable means for oscillating said stop to release said bar; and a spiral spring for rotating said bar when released, substantially as described.

In testimony whereof I have signed my name to this specification in the presence of two subscribing witnesses.

JOSEPH PFARRHOFER.

Witnesses:
ARTHUR A. OLSON,
JOSHUA R. H. POTTS.